Optical Modules for Huawei S Series Switches

Issue	01
Date	2020-02-07

HUAWEI TECHNOLOGIES CO., LTD.

Copyright © Huawei Technologies Co., Ltd. 2020. All rights reserved.

No part of this document may be reproduced or transmitted in any form or by any means without prior written consent of Huawei Technologies Co., Ltd.

Trademarks and Permissions

HUAWEI and other Huawei trademarks are trademarks of Huawei Technologies Co., Ltd.
All other trademarks and trade names mentioned in this document are the property of their respective holders.

Notice

The purchased products, services and features are stipulated by the contract made between Huawei and the customer. All or part of the products, services and features described in this document may not be within the purchase scope or the usage scope. Unless otherwise specified in the contract, all statements, information, and recommendations in this document are provided "AS IS" without warranties, guarantees or representations of any kind, either express or implied.

The information in this document is subject to change without notice. Every effort has been made in the preparation of this document to ensure accuracy of the contents, but all statements, information, and recommendations in this document do not constitute a warranty of any kind, express or implied.

Huawei Technologies Co., Ltd.

Address: Huawei Industrial Base
Bantian, Longgang
Shenzhen 518129
People's Republic of China

Website: https://e.huawei.com

Contents

1 Important Notes About Using Optical Modules Certified for Huawei Switches..... 1
1.1 How to Identify Huawei-Certified Switch Optical Modules..... 1
1.2 Risks of Using Non-Huawei-Certified Switch Optical Modules..... 3
2 Understanding Optical Modules..... 5
2.1 What Is an Optical Module..... 5
2.2 Types of Optical Modules..... 11
2.3 Parameter Description..... 12
2.4 How to View Optical Module Parameters..... 14
2.5 Rules for Optical Module Interoperation..... 14
3 Optical Modules Supported by Huawei S Series Switches..... 18
3.1 FE SFP/eSFP Optical Modules..... 18
3.1.1 SFP-FE-SX-MM1310..... 19
3.1.2 eSFP-FE-LX-SM1310..... 19
3.1.3 S-SFP-FE-LH40-SM1310..... 20
3.1.4 S-SFP-FE-LH80-SM1550..... 20
3.1.5 SFP-FE-LX-SM1310-BIDI (Single-Fiber-Bidirectional Module)..... 21
3.1.6 SFP-FE-LX-SM1550-BIDI (Single-Fiber-Bidirectional Module)..... 22
3.2 GE eSFP Optical Modules..... 23
3.2.1 eSFP-GE-SX-MM850..... 23
3.2.2 SFP-GE-LX-SM1310..... 23
3.2.3 S-SFP-GE-LH40-SM1310..... 24
3.2.4 S-SFP-GE-LH40-SM1550..... 25
3.2.5 S-SFP-GE-LH80-SM1550..... 25
3.2.6 eSFP-GE-ZX100-SM1550..... 26
3.2.7 SFP-GE-LX-SM1310-BIDI (Single-Fiber-Bidirectional Module)..... 27
3.2.8 SFP-GE-LX-SM1490-BIDI (Single-Fiber-Bidirectional Module)..... 28
3.2.9 LE2MGSC40DE0 (Single-Fiber-Bidirectional Module)..... 28
3.2.10 LE2MGSC40ED0 (Single-Fiber-Bidirectional Module)..... 29
3.2.11 SFP-GE-ZBXD1 (Single-Fiber-Bidirectional Module)..... 30
3.2.12 SFP-GE-ZBXU1 (Single-Fiber-Bidirectional Module)..... 31
3.2.13 SFP-GE-BXU1-SC (Single-Fiber-Bidirectional Module)..... 31
3.3 GE CSFP Optical Modules..... 32

3.3.1 CSFP-GE-FE-BXD1 ... 32
3.3.2 CSFP-GE-FE-BIDI2 ... 33
3.3.3 CSFP-GE-FE-BIDI4 ... 34
3.4 GE-CWDM eSFP Optical Modules ... 34
3.4.1 CWDM-SFPGE-1471 ... 34
3.4.2 CWDM-SFPGE-1491 ... 35
3.4.3 CWDM-SFPGE-1511 ... 36
3.4.4 CWDM-SFPGE-1531 ... 36
3.4.5 CWDM-SFPGE-1551 ... 37
3.4.6 CWDM-SFPGE-1571 ... 38
3.4.7 CWDM-SFPGE-1591 ... 38
3.4.8 CWDM-SFPGE-1611 ... 39
3.5 GE-CWDM eSFP Optical Modules (Used Only in the OADM scenario) ... 40
3.5.1 CWDM-SFPGE-1271 ... 40
3.5.2 CWDM-SFPGE-1291 ... 40
3.5.3 CWDM-SFPGE-1311 ... 41
3.5.4 CWDM-SFPGE-1331 ... 42
3.5.5 CWDM-SFPGE-1351 ... 42
3.5.6 CWDM-SFPGE-1371 ... 43
3.5.7 CWDM-SFPGE-1391 ... 44
3.5.8 CWDM-SFPGE-1411 ... 44
3.5.9 CWDM-SFPGE-1431 ... 45
3.5.10 CWDM-SFPGE-1451 ... 46
3.5.11 CWDM-SFPGE-1471 ... 46
3.5.12 CWDM-SFPGE-1491 ... 47
3.5.13 CWDM-SFPGE-1511 ... 48
3.5.14 CWDM-SFPGE-1531 ... 48
3.5.15 CWDM-SFPGE-1551 ... 49
3.5.16 CWDM-SFPGE-1571 ... 50
3.5.17 CWDM-SFPGE-1591 ... 50
3.5.18 CWDM-SFPGE-1611 ... 51
3.6 GE-DWDM eSFP Optical Modules ... 52
3.6.1 DWDM-SFPGE-1560-61 ... 52
3.7 10GE SFP+ Optical Modules ... 52
3.7.1 SFP-10G-USR ... 53
3.7.2 OSXD22N00 ... 53
3.7.3 OMXD30000 ... 54
3.7.4 SFP-10G-iLR ... 55
3.7.5 OSX010000 ... 55
3.7.6 OSX040N01 ... 56
3.7.7 SFP-10G-ER-1310 ... 57
3.7.8 SFP-10G-ZR ... 58

3.7.9 SFP-10G-BXU1 (Single-Fiber-Bidirectional Module) 58
3.7.10 SFP-10G-BXD1 (Single-Fiber-Bidirectional Module) 59
3.7.11 SFP-10G-ER-SM1330-BIDI (Single-Fiber-Bidirectional Module) 60
3.7.12 SFP-10G-ER-SM1270-BIDI (Single-Fiber-Bidirectional Module) 60
3.8 10GE XFP Optical Modules 61
3.8.1 XFP-SX-MM850 61
3.8.2 XFP-STM64-LX-SM1310 62
3.8.3 XFP-STM64-LH40-SM1550 63
3.8.4 XFP-STM64-SM1550-80km 63
3.9 10GE-CWDM SFP+ Optical Modules 64
3.9.1 SFP-10G-ZCW1471 64
3.9.2 SFP-10G-ZCW1491 65
3.9.3 SFP-10G-ZCW1511 66
3.9.4 SFP-10G-ZCW1531 66
3.9.5 SFP-10G-ZCW1551 67
3.9.6 SFP-10G-ZCW1571 67
3.9.7 SFP-10G-ZCW1591 68
3.9.8 SFP-10G-ZCW1611 69
3.10 10GE-CWDM XFP Optical Modules 69
3.10.1 CWDM-XFP10G-1471 69
3.10.2 CWDM-XFP10G-1491 70
3.10.3 CWDM-XFP10G-1511 71
3.10.4 CWDM-XFP10G-1531 71
3.10.5 CWDM-XFP10G-1551 72
3.10.6 CWDM-XFP10G-1571 73
3.10.7 CWDM-XFP10G-1591 73
3.10.8 CWDM-XFP10G-1611 74
3.11 10GE-DWDM SFP+ Optical Modules 75
3.11.1 SFP-10G-ZDWT 75
3.12 10GE-DWDM XFP Optical Modules 76
3.12.1 DWDM-XFP10G-1533-47 76
3.12.2 DWDM-XFP10G-1534-25 76
3.12.3 DWDM-XFP10G-1535-04 77
3.12.4 DWDM-XFP10G-1552-52 78
3.12.5 DWDM-XFP10G-1553-33 78
3.12.6 DWDM-XFP10G-1554-13 79
3.12.7 DWDM-XFP10G-1530-33 80
3.12.8 DWDM-XFP10G-1549-32 80
3.12.9 DWDM-XFP10G-1531-12 81
3.12.10 DWDM-XFP10G-1531-90 82
3.12.11 DWDM-XFP10G-1550-12 82
3.12.12 DWDM-XFP10G-1550-92 83

3.12.13 DWDM-XFP10G-1532-68 84
3.12.14 DWDM-XFP10G-1551-72 84
3.12.15 DWDM-XFP10G-1529-55 85
3.12.16 DWDM-XFP10G-1548-51 86
3.13 40GE QSFP+ Optical Modules 86
3.13.1 QSFP-40G-SR4 86
3.13.2 QSFP-40G-iSR4 87
3.13.3 QSFP-40G-eSR4 88
3.13.4 QSFP-40G-iSM4 89
3.13.5 QSFP-40G-eSM4 90
3.13.6 QSFP-40G-LX4 90
3.13.7 QSFP-40G-LR4 91
3.13.8 QSFP-40G-ER4 92
3.13.9 QSFP-40G-SR-BD 93
3.13.10 QSFP-40G-SDLC-PAM 93
3.13.11 QSFP-40G-eSDLC-PAM 94
3.14 40GE CFP Optical Modules 95
3.14.1 CFP-40G-SR4 95
3.14.2 CFP-40G-LR4 96
3.14.3 CFP-40G-ER4 96
3.14.4 CFP-40G-ZR4 97
3.15 100GE CFP Optical Modules 98
3.15.1 CFP-100G-SR10 98
3.15.2 CFP-100G-LR4 98
3.15.3 CFP-100G-ER4 99
3.16 100GE QSFP28 Optical Modules 100
3.16.1 QSFP28-100G-LR4 100
3.16.2 QSFP28-100G-10KM 101
3.16.3 QSFP28-100G-PSM4 101
3.16.4 QSFP28-100G-SR4 102
3.16.5 QSFP-100G-eSR4 103
3.16.6 QSFP-100G-CLR4 104
3.16.7 QSFP-100G-CWDM4 104
3.16.8 QSFP-100G-ER4-Lite 105
3.17 GPON Optical Modules 106
3.17.1 H87MMA5671A2 106
3.18 Industrial Optical Modules 106
3.18.1 OGSM01880 107
3.18.2 OGSC10DD0 107
3.18.3 OGSC40DD0 108
3.18.4 SFP+10GE-LH10-SM1310 109
3.18.5 SFP-10G-SR 109

3.18.6 SFP-10G-iLR 110
3.18.7 SFP-10G-BXU1 (Single-Fiber-Bidirectional Module) 111
3.18.8 SFP-10G-BXD1 (Single-Fiber-Bidirectional Module) 111
3.18.9 SFP-GE-BX-D1-I (Single-Fiber-Bidirectional Module) 112
3.18.10 SFP-GE-BX-U1-I (Single-Fiber-Bidirectional Module) 113

4 FAQs About Optical Modules 114

4.1 How Do I Query the Optical Modules Supported by Switches? 115
4.2 Huawei Switches Must Use Huawei-certified Optical Modules 115
4.3 Are Optical Modules of Huawei Switches Interchangeable with Optical Modules of Other Manufacturers? 116
4.4 What Are the Differences Between a 10GBASE-LRM Optical Module and Other Optical Modules? Can They Interoperate? 116
4.5 How Do I Choose Single-mode and Multi-mode Optical Modules? 116
4.6 Are Attenuators Required in the Case of Short-Distance Connection Using Single-Mode Optical Modules? 116
4.7 Select Appropriate Optical Fibers to Connect 10GE Multimode Optical Modules on Two Switches 117
4.8 Why an Interface Does Not Enter the linkdown State When Its Receiving Power Reaches the Lower Threshold? 117
4.9 Does a Port Frequently Alternate Between Up and Down States When a Non-Huawei-Certified Optical Module Is Used? 118
4.10 How Can I Determine Whether an Optical Module Is Identified by the Switch or Check the Transmit Power of an Optical Module? 118
4.11 Can an XFP Optical Module Interconnect with an SFP+ Optical Module? 119
4.12 What Is a Single-Fiber Bidirectional Optical Module? 119
4.13 Can a Multi-mode Optical Module Use a Single-Mode Optical Fiber? Can a Single-Mode Optical Module Use a Multi-mode Optical Fiber? 119
4.14 Why Does a Multi-mode Optical Module Have Multiple Transmission Distances? 120
4.15 Will an Optical Module Be Damaged If the Receive Power Is High? 120

5 Optical Module Installation and Replacement 121

5.1 Installing an Optical Module 121
5.2 Replacing an Optical Module 122

6 Typical Troubleshooting Cases of Optical Module 126

6.1 General Optical Module Troubleshooting Procedure 127
6.2 A Switch Cannot Display Any Optical Module Information but Services Are Running Normally 128
6.3 Transmit Power of an Optical Module Is Low 129
6.4 An Optical Module Does Not Emit Optical Signals 129
6.5 An Optical Module Has Normal Transmit Power but Many Packets Are Dropped on the Port Due to Bit Errors 129

1 Important Notes About Using Optical Modules Certified for Huawei Switches

1.1 How to Identify Huawei-Certified Switch Optical Modules
1.2 Risks of Using Non-Huawei-Certified Switch Optical Modules

1.1 How to Identify Huawei-Certified Switch Optical Modules

NOTICE

- A switch must use optical or copper modules that have been certified for use on Huawei switches. Non-certified optical or copper modules cannot ensure transmission reliability and may affect service stability. Huawei is not liable for any problem caused by the use of non-certified optical or copper modules and will not fix such problems.
- The methods provided here are only for reference. To confirm whether optical modules you are using have been certified for use on Huawei switches, contact Huawei technical support.

10GE or Lower Speed Optical Modules

Huawei started certification on 10GE or lower speed optical modules for switch products on July 1, 2013.

To determine whether optical modules delivered for Huawei switches before July 1, 2013 are certified ones, contact Huawei technical support.

If your optical modules are delivered after July 1, 2013, use either of the following methods to determine whether they have been certified by Huawei.

Method 1: Check for "HUAWEI" on the label

 Copyright © Huawei Technologies Co., Ltd.

If an optical module has been certified by Huawei, its label contains "HUAWEI", as shown in **Figure 1-1**.

Figure 1-1 "HUAWEI" on the label of a Huawei-certified switch optical module

Method 2: Run the display transceiver command

An optical module has received Huawei switch certification if it meets the following conditions:

- In the **display elabel** command output, the **Manufactured** field displays a date later than 2013-07-01.
- In the **display version** command output, the displayed version is V200R001C00 or later.
- In the **display transceiver** command output, the **Vendor Name** field displays **HUAWEI**.

NOTE

The SFP-FE-SX-MM1310 (part number: 02315233) is a Huawei-certified 100M optical module. However, the **Vendor Name** field displays the original manufacturer name, instead of **HUAWEI**.

For copper modules, the **Vendor Name** field also displays the original manufacturer name, instead of **HUAWEI**.

40GE and 100GE Optical Modules

Huawei started certification on 40GE and 100GE optical modules for switch products on January 1, 2016.

To determine whether optical modules delivered for Huawei switches before January 1, 2016 are certified ones, contact Huawei technical support.

If your optical modules are delivered after January 1, 2016, use either of the following methods to determine whether they have been certified by Huawei.

Method 1: Check for "HUAWEI" on the label

If an optical module has been certified by Huawei, its label contains "HUAWEI", as shown in **Figure 1-1**.

Method 2: Run the display transceiver command

A 40GE or 100GE optical module has received Huawei switch certification if it meets the following conditions:

- In the **display elabel** command output, the **Manufactured** field displays a date later than 2016-01-01.
- In the **display version** command output, the displayed version is V200R008 or later.
- In the **display transceiver** command output, the **Vendor Name** field displays **HUAWEI**.

 Copyright © Huawei Technologies Co., Ltd.

NOTE

For the optical modules connected to high-speed cables or AOC cables, the **Vendor Name** field displays the original manufacturer name, instead of **HUAWEI**. For the methods of checking whether such an optical module has been certified by Huawei, contact technical support personnel.

1.2 Risks of Using Non-Huawei-Certified Switch Optical Modules

During certification of optical modules for Huawei switches, Huawei completes comprehensive functionality verification to ensure quality of optical modules. The verified items include optical module plug/unplug, transmit optical power, receive optical power, signal transmission quality, data reading, error tolerance, compatibility, electromagnetic compatibility (EMC), and environmental parameters.

Non-Huawei-certified switch optical modules may cause the following problems:

- Non-standard structure and size cause failures to install optical modules on adjacent optical interfaces.

  Structures or sizes of some non-Huawei-certified optical modules do not comply with the Multi-Source Agreement (MSA). When such an optical module is installed on an optical interface, the size of this optical module hinders optical module installation on adjacent optical interfaces.
- Data bus defects cause suspension of a switch's data bus.

  Some non-Huawei-certified optical modules have defects in data bus designs. Using such an optical module on a switch causes suspension of the connected data bus on the switch. As a result, data on the suspended bus cannot be read.
- Improper edge connector size damages electronic devices of optical interfaces.

  If a non-Huawei-certified switch optical module with improper edge connector size is used on an optical interface, electronic devices of the optical interface will be damaged by short circuits.
- Unnormalized temperature monitoring causes incorrect alarms.

  The temperature monitoring systems of some non-Huawei-certified switch optical modules do not comply with industry standards and report temperature values higher than the real temperature. When such optical modules are used on a switch, the system will report incorrect temperature alarms.
- Improper register settings cause errors or failures in reading parameters or diagnostic information.

  Some non-Huawei-certified switch optical modules have improper register values on page A0, which can cause errors or failures when the system attempts to read parameters or diagnostic information from a data bus.
- Some non-Huawei-certified switch optical modules are not designed in compliance with EMC standards and have low anti-interference capability. Additionally, they bring electromagnetic interference to nearby devices.

 Copyright © Huawei Technologies Co., Ltd.

- The operating temperature ranges of non-Huawei-certified switch optical modules cannot meet service requirements. When they are used under relatively high temperature, the optical power decreases, resulting in service interruption.

 Copyright © Huawei Technologies Co., Ltd.

2 Understanding Optical Modules

2.1 What Is an Optical Module
2.2 Types of Optical Modules
2.3 Parameter Description
2.4 How to View Optical Module Parameters
2.5 Rules for Optical Module Interoperation

2.1 What Is an Optical Module

On an optical network, a sender needs to convert electrical signals into optical signals before sending them to a receiver, and the receiver needs to convert received optical signals into electrical signals. An optical module is a component that completes electrical/optical conversion on an optical network. **Figure 2-1** shows the structure of an optical module.

 Copyright © Huawei Technologies Co., Ltd.

Figure 2-1 Structure of an optical module (using an SFP/eSFP optical module as an example)

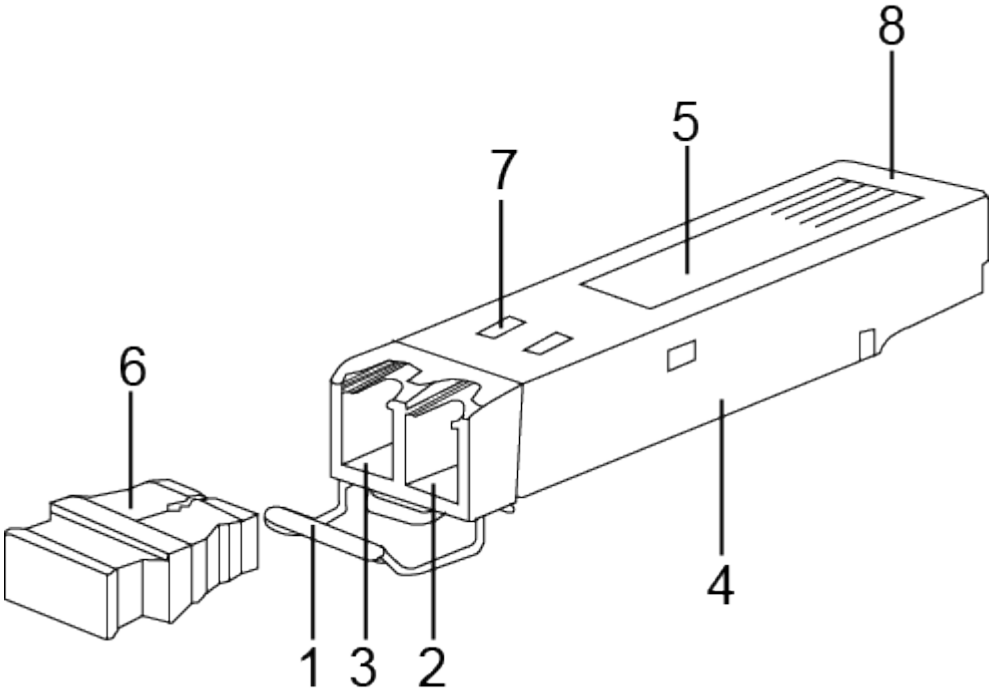

1. Handle	2. Receiver	3. Transmitter
4. Shell	5. Label	6. Dust plug
7. Spring	8. Connector	-

Figure 2-2 shows an SFP/eSFP optical module.

Figure 2-2 SFP/eSFP optical module

Figure 2-3 shows the appearance of an SFP+ optical module.

Figure 2-3 Appearance of an SFP+ optical module

Figure 2-4 and **Figure 2-5** show the appearance of a QSFP+ optical module.

Figure 2-4 Appearance of a QSFP+ optical module (for LC optical fibers)

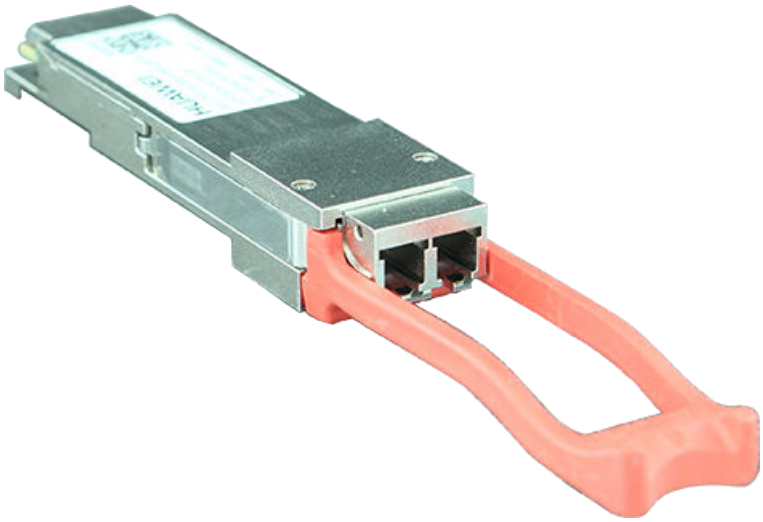

Figure 2-5 Appearance of a QSFP+ optical module (for MPO optical fibers)

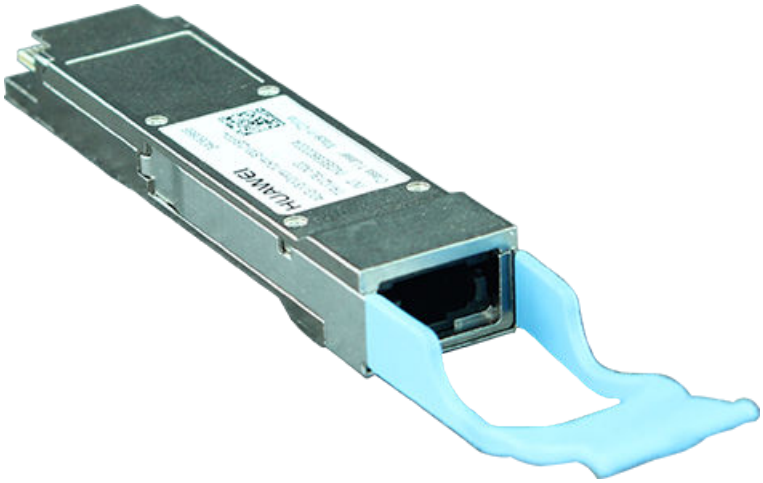

NOTICE

The side with an L-shaped notch close to the connector is the top of a QSFP+ optical module, as shown in **Figure 2-4**. When connecting a QSFP+ optical module to a port, keep the top side upward. Do not insert the QSFP+ optical module upside down.

Currently, there is no formal standard for 40G Ethernet. Therefore, a device may not display complete diagnostic information about 40GE optical modules. This is an acceptable fact in the telecommunications industry and does not affect functions of 40GE optical modules.

Figure 2-6 shows the appearance of a CSFP optical module.

Figure 2-6 Appearance of a CSFP optical module

Figure 2-7 shows the appearance of an XFP module.

Figure 2-7 Appearance of an XFP optical module

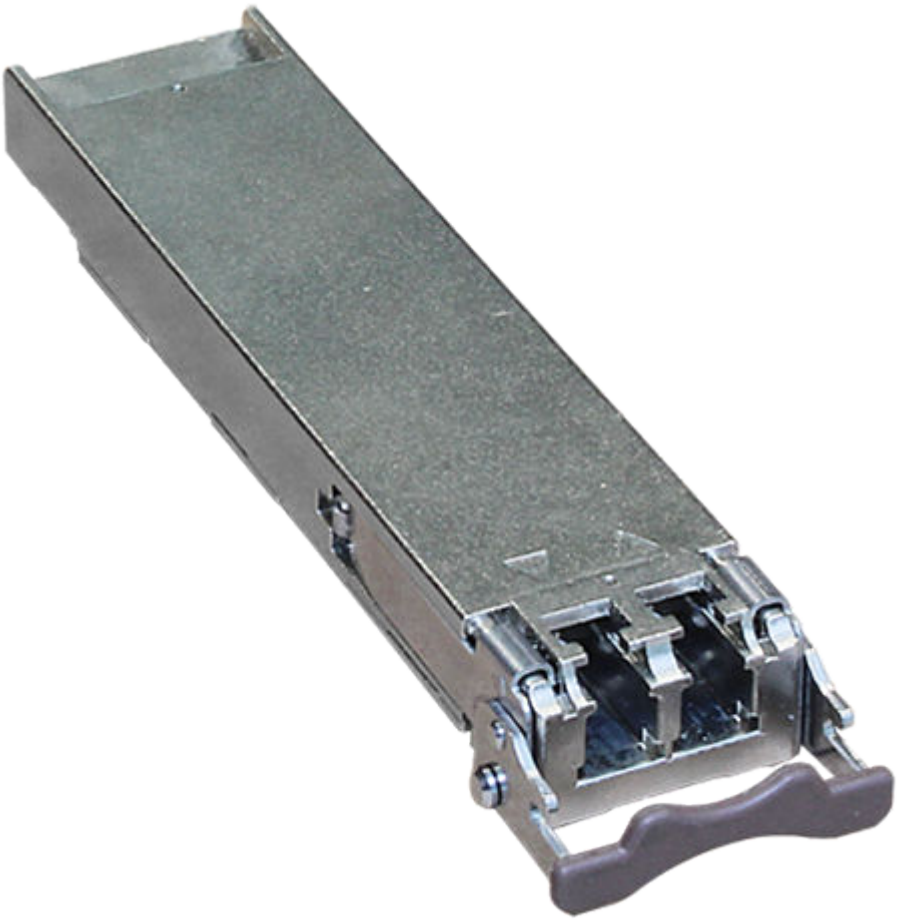

NOTE

The SFP+ and XFP optical modules are 10GE hot-pluggable optical modules. Compared with the SFP+ optical modules, the XFP optical modules have a larger caliber.

Figure 2-8 and **Figure 2-9** show CFP optical modules for different optical fibers.

Figure 2-8 CFP 100GE optical module (for LC optical fibers)

Figure 2-9 CFP 100GE optical module (for MPO optical fibers)

Figure 2-10 and **Figure 2-11** show the appearance of a QSFP28 optical module.

Figure 2-10 Appearance of a QSFP28 optical module (for MPO optical fibers)

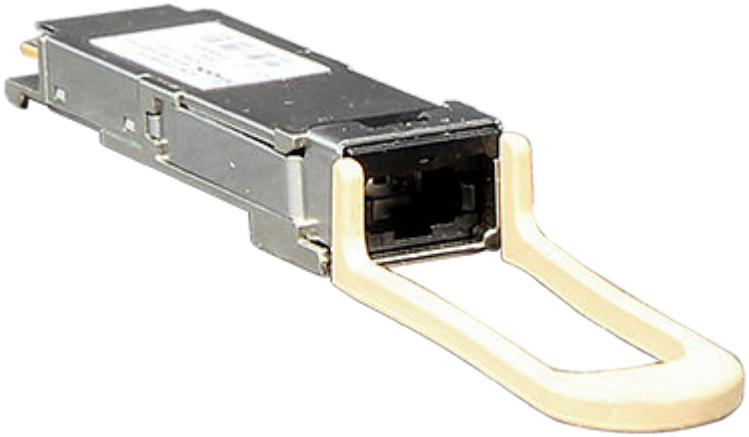

Figure 2-11 Appearance of a QSFP28 optical module (for LC optical fibers)

2.2 Types of Optical Modules

Optical modules are available in various types to meet diversified requirements.

- **Classified by transmission rates**

  Depending on transmission rates, optical modules are classified into 100GE, 40GE, 10GE, FE, and GE optical modules.

- **Classified by encapsulation types**

  The higher transmission rate an optical module provides, the more complex structure it has. Optical modules are encapsulated in different modes to provide different structures. Huawei switches support optical modules of the following encapsulation types: CFP, QSFP+, QSFP28, XFP, SFP, eSFP, and SFP+. All optical modules are hot swappable.

  - SFP: small form-factor pluggable. SFP optical modules support LC fiber connectors.
  - eSFP: enhanced small form-factor pluggable. An eSFP module is an SFP module that supports monitoring of voltage, temperature, bias current, transmit optical power, and receive optical power. Therefore, eSFP is also called SFP sometimes.
  - SFP+: small form-factor pluggable plus, SFP with a higher rate. SFP+ optical modules are more sensitive to electromagnetic interference (EMI) because they have a higher rate. To reduce EMI, SFP+ optical modules have more springs than SFP optical modules and the cages for SFP+ modules on a card are tighter.
  - XFP: 10 Gigabit small form-factor pluggable. X is the Roman numeral 10, meaning that all XFP optical modules provide a 10 Gbit/s transmission rate. XFP optical modules support LC fiber connectors. They are wider and longer than SFP+ optical modules.
  - QSFP+: quad small form-factor pluggable. QSFP+ optical modules support MPO fiber connectors and are larger than SFP+ optical modules.
  - CFP: centum form-factor pluggable. The dimensions of a CFP optical module are 144.75 mm x 82 mm x 13.6 mm (L x W x H). CFP is a new optical module standard that can be used in data communication and telecommunications fields.
  - QSFP28: with the same interface size as a QSFP+ module. A QSFP28 interface can use a 100GE QSFP28 optical module or a 40GE QSFP+ optical module.

- **Classified by physical layer standards**

  Different physical layer standards are defined to allow data transmission in different modes. Therefore, different types of optical modules are produced to comply with these standards. For details, see **Standards compliance** of the specific optical module.

- **Classified by modes**

  Optical fibers are classified into single-mode and multimode fibers. Therefore, optical modules are also classified into single-mode and multimode modules to support different optical fibers.

 Copyright © Huawei Technologies Co., Ltd.

- Single-mode optical modules are used with single-mode fibers. Single-mode fibers support a wide band and large transmission capacity, and are used for long-distance transmission.
- Multimode optical modules are used with multimode fibers. Multimode fibers have lower transmission performance than single-mode fibers because of modal dispersion, but their costs are also lower. They are used for small-capacity, short-distance transmission.

Wavelength division multiplexing modules differ from other optical modules in center wavelengths. A common optical module has a center wavelength of 850 nm, 1310 nm, or 1550 nm, whereas a wavelength division multiplexing module transmits lights with different center wavelengths. Wavelength division multiplexing modules are classified into two types: coarse wavelength division multiplexing (CWDM) and dense wavelength division multiplexing (DWDM). Within the same band, DWDM modules are available in more types and use wavelength resources more efficiently than CWDM modules. DWDM and CWDM modules allow lights with different center wavelengths to be transmitted on one fiber without interfering each other. Therefore, a passive multiplexer can be used to combine the lights into one channel, which is then split into multiple channels by a demultiplexer on the remote end. This reduces the optical fibers required. DWDM and CWDM modules are used for long-distance transmission.

The transmit power of a long-distance optical module is often larger than its overload power. Therefore, when using such optical modules, select optical fibers of an appropriate length to ensure that the actual receive power is smaller than the overload power. If the optical fibers connected to a long-distance optical module are too short, use an optical attenuator to reduce the receive power on the remote optical module. Otherwise, the remote optical module may be burnt. Generally, an optical attenuator is required if an optical module supporting a transmission distance longer than 10 km is used together with short optical fibers.

2.3 Parameter Description

Transmit optical power	Output optical power of an optical module when it is working properly. When two optical modules are connected, the transmit optical power of one end must be within the range of receive optical power on the other end.
Receive optical power	Average input optical power that the receiver of an optical module can receive within a range of bit error rate (BER = 10^{-12}). The upper limit of this parameter is the overload optical power and the lower limit is the maximum receiver sensitivity. When two optical modules are connected, the receive optical power on one end determines the range of transmit optical power on the other end.
Maximum receiver sensitivity	Minimum average input optical power that the receiver of an optical module can receive within a range of bit error rate (BER = 10^{-12}). When two optical modules are connected, the maximum receiver sensitivity on one end determines the minimum value of transmit optical power on the other end.

 Copyright © Huawei Technologies Co., Ltd.

Overload optical power	Maximum average input optical power that the receiver of an optical module can receive within a range of bit error rate (BER = 10^{-12}). When two optical modules are connected, the overload optical power on one end determines the maximum transmit optical power on the other end.
Extinction ratio	Minimum ratio of the average optical power with signals transmitted against the average optical power without signals transmitted in complete modulation mode. The extinction ratio indicates the capability of an optical module to identify signal 0 and signal 1. This parameter is a quality indicator for optical modules. Optical modules with a large extinction ratio may not have good quality. Qualified optical modules should have an extinction ratio complying with IEEE 802.3.
Fiber mode	Mode of optical fibers defined based on core diameters and features of optical fibers. Optical fibers are classified into single-mode and multimode fibers. Generally, multimode fibers have large core diameters and severe dispersion, so they transmit optical signals over short distances. Single-mode fibers have low dispersion and can transmit optical signals over long distances.
Modal bandwidth	Bandwidth measured at a point with transmit power several dB lower than that of the point with the peak center wavelength. Modal bandwidth reflects spectrum characteristics of multimode fibers. The higher modal bandwidth a multimode fiber has, the longer transmission distance the fiber supports.
Fiber diameter	Diameter of the core of a fiber. According to international standards for optical fibers, the diameter of a multimode fiber is 62.5 um or 50 um, and the diameter of a single-mode fiber is 9 um. Select optical fibers with diameters supported by the optical modules.
Fiber class	Optical signals with different wavelengths have their best working windows in different optical fibers. To help efficiently adjust wavelengths or dispersion features of optical fibers and change their refractive indexes, the following fiber classes are defined: multimode fiber (G.651), common single-mode fiber (G.652), shifted dispersion fiber (G.653), and non-zero shifted dispersion fiber (G.655). G.651 and G.652 are commonly used fiber classes. Optical fibers of higher classes support longer transmission distances. When selecting optical fibers for optical modules, determine the classes of fibers based on the required transmission distances.
Connector type	Type of the interface on an optical module to accommodate a fiber. Commonly used connector types are LC (applicable to all the SFP, SFP+, and XFP modules), SC, and MPO (applicable to 150 m QSFP+ and CXP modules). Select optical fibers with connectors supported by the optical modules.

 Copyright © Huawei Technologies Co., Ltd.

Transmission distance	Maximum distance over which optical signals can transmit. Optical signals sent from different types of sources can transmit over different distances due to negative effects of optical fibers, such as dispersion and attenuation. When connecting optical interfaces, select optical modules and fibers based on the maximum signal transmission distance.
Interface rate	Maximum rate of electrical signals that an optical component can transmit without bit errors. The interface rates defined in Ethernet standards include 125 Mbit/s, 1.25 Gbit/s, 10.3125 Gbit/s, and 41.25 Gbit/s. When connecting optical interfaces, select optical modules and fibers based on the maximum signal transmission rate.
Center wavelength	Wavelength measured at the midpoint of the half-amplitude line in the transmit spectrum. Two connected optical modules must have the same center wavelength.
MSA	Multi-Source Agreement, a non-profit organization jointly established by optical module manufacturers. This agreement defines the structure and dimensions of optical transceivers by referring to Optical Internetworking Forum (OIF) and International Telecommunication Union (ITU) standards.

2.4 How to View Optical Module Parameters

Viewing the Hardware Description

If you know the model or type of an optical module, you can view the section "Pluggable Modules for Interfaces" in the *Hardware Description* to look up parameters of the optical module, including the center wavelength, transmission distance, fiber types supported, receive optical power, and transmit optical power.

Using a Command

If an optical module is installed in a running switch, you can run the **display transceiver** command to view parameters of the optical module, including the center wavelength, transmission distance, fiber types supported, receive optical power, and transmit optical power.

2.5 Rules for Optical Module Interoperation

Interoperation Rules

Optical modules with the same standards can interoperate with each other. The standards define the rate, wavelength, and transmission distance of optical modules, but not their encapsulation modes (two interoperated optical modules can have different encapsulation modes).

If you need to achieve interoperability between optical modules with different standards, contact technical support personnel.

 Copyright © Huawei Technologies Co., Ltd.

When Huawei switches are connected to other products such as routers, comply with the preceding optical module interoperation rules.

Standards Description

The following describes the standards, using 1000BASE-LX10 as an example:

- 1000 indicates the rate (1000 Mbit/s, in this case). Other rates include 10 Mbit/s, 100 Mbit/s, 10 Gbit/s, 40 Gbit/s, and 100 Gbit/s.
- BASE indicates baseband transmission.
- L represents a center wavelength of the laser. Currently, the following center wavelengths are available: S (short wavelength: 850 nm), L (long wavelength: 1310 nm), E (extra long wavelength: 1550 nm), and B (single-fiber bidirectional long wavelength).
- X represents the encoding format. The encoding formats include T (twisted pair), X (8B/10B), R (64B/66B), and W (WIS).
- 10 indicates the number of channels. Currently, the value can be 4 or 10. If there is no number, the value is 1.

NOTE

This example provides the definitions in IEEE standards, which are not applicable to all optical modules, for example, non-standard optical modules.

The following organizations or agreements define standards related to optical modules:

- IEEE 802.3, which defines MAC and PHY standards
- Small Form Factor (SFF) committee or Multi-Source Agreements (MSAs), which define optical module hardware, software, and structure standards

Interoperability of 40GE and 100GE Optical Modules

Huawei S series switches support the following types of 40GE and 100GE optical modules:

- 40GE QSFP+ optical modules
- 40GE CFP optical modules
- 100GE CFP optical modules
- 100GE QSFP28 optical modules

 Copyright © Huawei Technologies Co., Ltd.

Figure 2-12 Interoperability of 40GE optical modules in different encapsulation modes

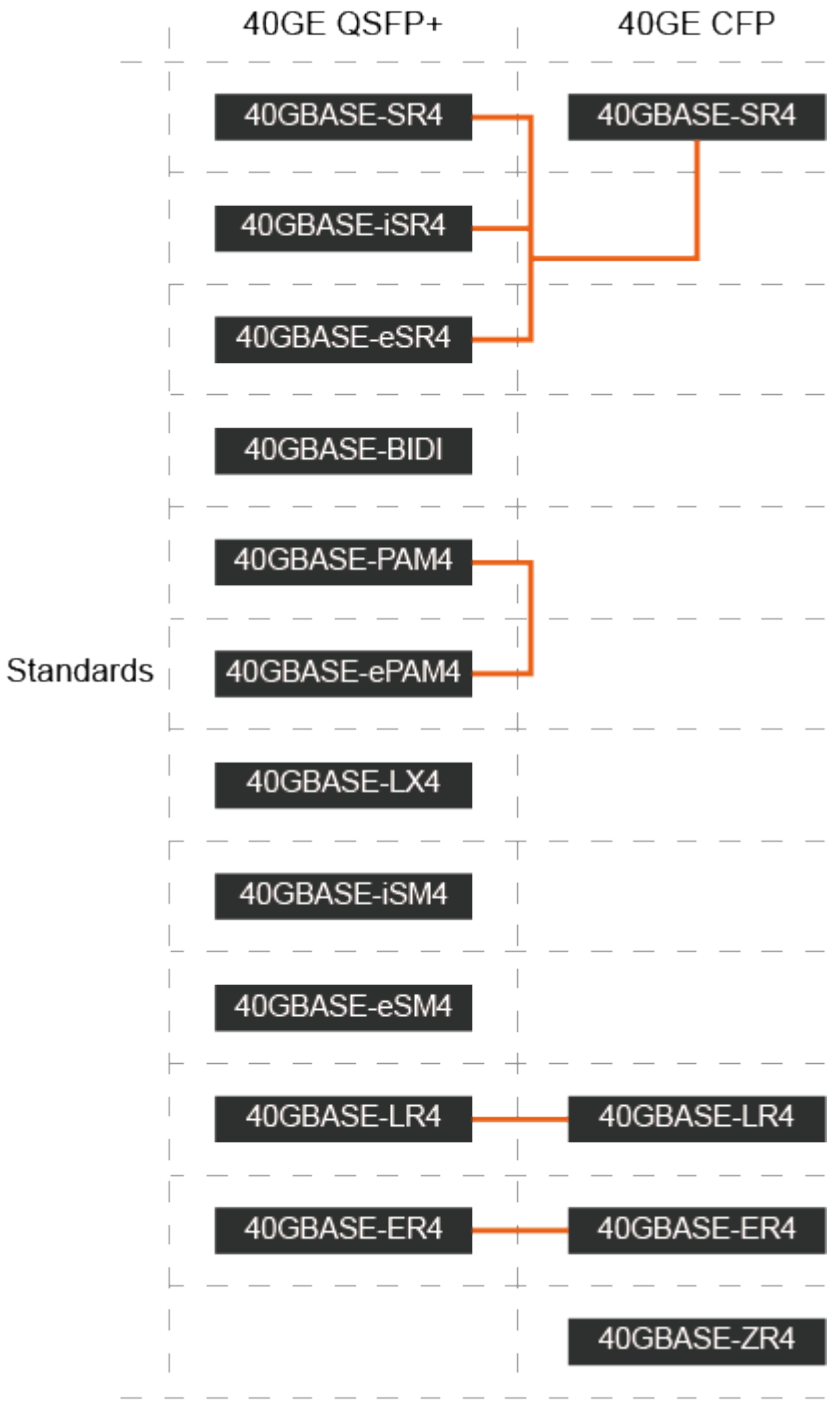

Figure 2-13 Interoperability of 100GE optical modules in different encapsulation modes

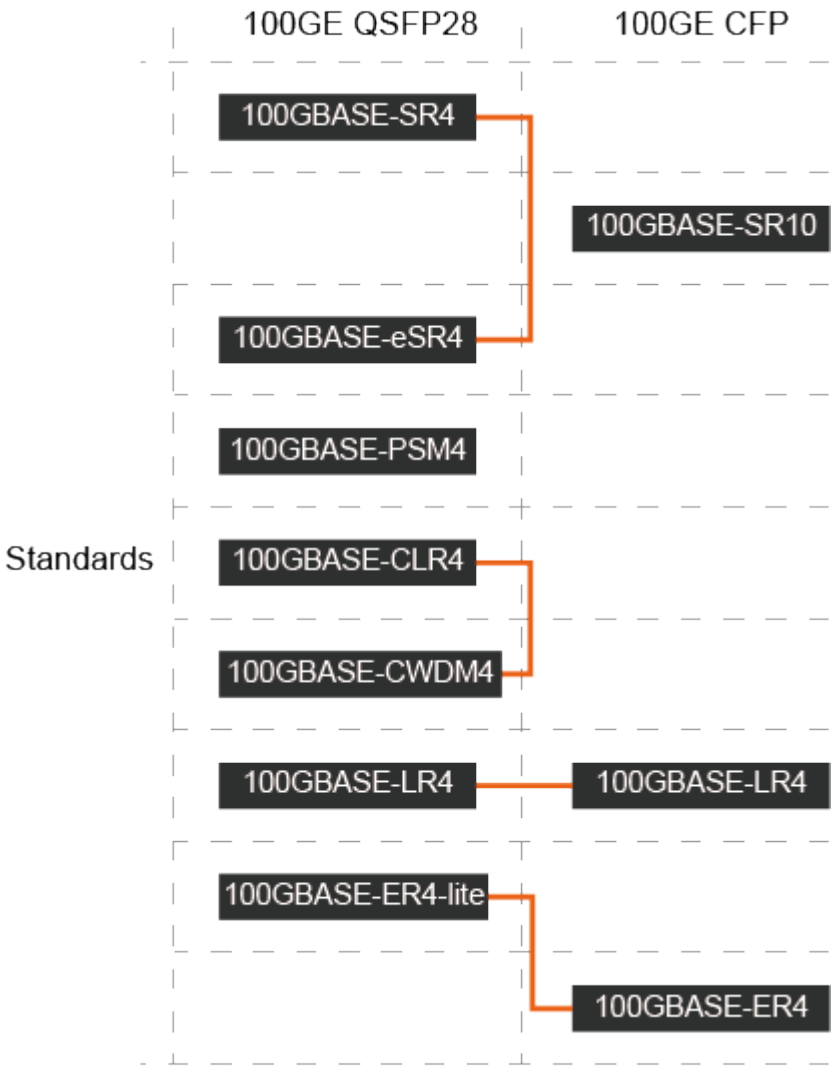

NOTE

Optical modules complying with the standards connected in the preceding figures can interoperate with each other.

iSR4 and eSR4 are non-standard formats derived from SR4, and support interoperation with SR4.

A 40GBASE-PAM4 optical module can interoperate with a 40GBASE-ePAM4 optical module.

A 100GBASE-CLR4 optical module can interoperate with a 100GBASE-CWDM4 optical module.

A 100GBASE-ER4-lite optical module can interoperate with a 100GBASE-ER4 optical module, at a maximum distance of 30 km.

 Copyright © Huawei Technologies Co., Ltd.

3 Optical Modules Supported by Huawei S Series Switches

3.1 FE SFP/eSFP Optical Modules
3.2 GE eSFP Optical Modules
3.3 GE CSFP Optical Modules
3.4 GE-CWDM eSFP Optical Modules
3.5 GE-CWDM eSFP Optical Modules (Used Only in the OADM scenario)
3.6 GE-DWDM eSFP Optical Modules
3.7 10GE SFP+ Optical Modules
3.8 10GE XFP Optical Modules
3.9 10GE-CWDM SFP+ Optical Modules
3.10 10GE-CWDM XFP Optical Modules
3.11 10GE-DWDM SFP+ Optical Modules
3.12 10GE-DWDM XFP Optical Modules
3.13 40GE QSFP+ Optical Modules
3.14 40GE CFP Optical Modules
3.15 100GE CFP Optical Modules
3.16 100GE QSFP28 Optical Modules
3.17 GPON Optical Modules
3.18 Industrial Optical Modules

3.1 FE SFP/eSFP Optical Modules

 Copyright © Huawei Technologies Co., Ltd.

3.1.1 SFP-FE-SX-MM1310

Table 3-1 Technical specifications

Item	Description
Transceiver form factor	SFP
Transmission speed	FE
Center wavelength (nm)	1310
Standards compliance	100BASE-FX
Connector type	LC
Applicable cable and maximum transmission distance	Multimode fiber (50 μm or 62.5 μm diameter): 2 km
Transmit power (dBm)	-19.0 to -14.0
Maximum receiver sensitivity (dBm)	-30.0
Overload power (dBm)	-14.0
Extinction ratio (dB)	10
Operating temperature	0°C to 70°C (32°F to 158°F)
Part number	02315233

3.1.2 eSFP-FE-LX-SM1310

Table 3-2 Technical specifications

Item	Description
Transceiver form factor	eSFP
Transmission speed	FE
Center wavelength (nm)	1310
Standards compliance	Non-standard
Connector type	LC
Applicable cable and maximum transmission distance	Single-mode fiber: 15 km

Copyright © Huawei Technologies Co., Ltd.

Item	Description
Transmit power (dBm)	-15.0 to -8.0
Maximum receiver sensitivity (dBm)	-28.0
Overload power (dBm)	-8.0
Extinction ratio (dB)	8.2
Operating temperature	0°C to 70°C (32°F to 158°F)
Part number	02315205

3.1.3 S-SFP-FE-LH40-SM1310

Table 3-3 Technical specifications

Item	Description
Transceiver type	eSFP
Transmission speed	FE
Center wavelength (nm)	1310
Standards compliance	Non-standard
Connector type	LC
Applicable cable and maximum transmission distance	Single-mode fiber: 40 km
Transmit power (dBm)	-5.0 to 0
Maximum receiver sensitivity (dBm)	-37.0
Overload power (dBm)	-10.0
Extinction ratio (dB)	10.5
Operating temperature	0°C to 70°C (32°F to 158°F)
Part number	02317344

3.1.4 S-SFP-FE-LH80-SM1550

Copyright © Huawei Technologies Co., Ltd.

Table 3-4 Technical specifications

Item	Description
Transceiver form factor	eSFP
Transmission speed	FE
Center wavelength (nm)	1550
Standards compliance	Non-standard
Connector type	LC
Applicable cable and maximum transmission distance	Single-mode fiber: 80 km
Transmit power (dBm)	-5.0 to 0
Maximum receiver sensitivity (dBm)	-37.0
Overload power (dBm)	-10.0
Extinction ratio (dB)	10.5
Operating temperature	0°C to 70°C (32°F to 158°F)
Part number	02317345

3.1.5 SFP-FE-LX-SM1310-BIDI (Single-Fiber-Bidirectional Module)

Table 3-5 Technical specifications

Item	Description
Transceiver form factor	eSFP
Transmission speed	FE
Center wavelength (nm)	Rx: 1550/Tx: 1310
Standards compliance	100BASE-BX
Connector type	LC
Applicable cable and maximum transmission distance	Single-mode fiber: 15 km
Transmit power (dBm)	-15.0 to -8.0

Copyright © Huawei Technologies Co., Ltd.

Item	Description
Maximum receiver sensitivity (dBm)	-32.0
Overload power (dBm)	-8.0
Extinction ratio (dB)	8.5
Operating temperature	0°C to 70°C (32°F to 158°F)
Part number	02315203

NOTE

BIDI optical modules must be used in pairs. For example, SFP-FE-LX-SM1310-BIDI must be used with SFP-FE-LX-SM1550-BIDI.

3.1.6 SFP-FE-LX-SM1550-BIDI (Single-Fiber-Bidirectional Module)

Table 3-6 Technical specifications

Item	Description
Transceiver form factor	eSFP
Transmission speed	FE
Center wavelength (nm)	Rx: 1310/Tx: 1550
Standards compliance	100BASE-BX
Connector type	LC
Applicable cable and maximum transmission distance	Single-mode fiber: 15 km
Transmit power (dBm)	-15.0 to -8.0
Maximum receiver sensitivity (dBm)	-32.0
Overload power (dBm)	-8.0
Extinction ratio (dB)	8.5
Operating temperature	0°C to 70°C (32°F to 158°F)
Part number	02315202

Copyright © Huawei Technologies Co., Ltd.

NOTE

BIDI optical modules must be used in pairs. For example, SFP-FE-LX-SM1550-BIDI must be used with SFP-FE-LX-SM1310-BIDI.

3.2 GE eSFP Optical Modules

3.2.1 eSFP-GE-SX-MM850

Table 3-7 Technical specifications

Item	Description
Transceiver form factor	eSFP
Transmission speed	GE
Center wavelength (nm)	850
Standards compliance	1000BASE-SX
Connector type	LC
Applicable cable and maximum transmission distance	• Multimode fiber (with modal bandwidth of 160 MHz*km and diameter of 62.5 μm): 0.22 km • Multimode fiber (OM1): 0.275 km • Multimode fiber (with modal bandwidth of 400 MHz*km and diameter of 50 μm): 0.5 km • Multimode fiber (OM2): 0.55 km • Multimode fiber (OM3): 1 km
Transmit power (dBm)	-9.5 to -2.5
Maximum receiver sensitivity (dBm)	-17.0
Overload power (dBm)	0
Extinction ratio (dB)	9
Operating temperature	0°C to 70°C (32°F to 158°F)
Part number	02315204

3.2.2 SFP-GE-LX-SM1310

Copyright © Huawei Technologies Co., Ltd.

Table 3-8 Technical specifications

Item	Description
Transceiver form factor	eSFP
Transmission speed	GE
Center wavelength (nm)	1310
Standards compliance	1000BASE-LX10/LH
Connector type	LC
Applicable cable and maximum transmission distance	Single-mode fiber: 10 km
Transmit power (dBm)	-9.0 to -3.0
Maximum receiver sensitivity (dBm)	-20.0
Overload power (dBm)	-3.0
Extinction ratio (dB)	9
Operating temperature	0°C to 70°C (32°F to 158°F)
Part number	02315200

3.2.3 S-SFP-GE-LH40-SM1310

Table 3-9 Technical specifications

Item	Description
Transceiver type	eSFP
Transmission speed	GE
Center wavelength (nm)	1310
Standards compliance	1000BASE-EX (non-standard)
Connector type	LC
Applicable cable and maximum transmission distance	Single-mode fiber: 40 km
Transmit power (dBm)	-5.0 to 0

Copyright © Huawei Technologies Co., Ltd.

Item	Description
Maximum receiver sensitivity (dBm)	-23
Overload power (dBm)	-3.0
Extinction ratio (dB)	9
Operating temperature	0°C to 70°C (32°F to 158°F)
Part number	02317346

3.2.4 S-SFP-GE-LH40-SM1550

Table 3-10 Technical specifications

Item	Description
Transceiver type	eSFP
Transmission speed	GE
Center wavelength (nm)	1550
Standards compliance	Non-standard
Connector type	LC
Applicable cable and maximum transmission distance	Single-mode fiber: 40 km
Transmit power (dBm)	-5.0 to 0
Maximum receiver sensitivity (dBm)	-22
Overload power (dBm)	-3.0
Extinction ratio (dB)	9
Operating temperature	0°C to 70°C (32°F to 158°F)
Part number	02317347

3.2.5 S-SFP-GE-LH80-SM1550

Copyright © Huawei Technologies Co., Ltd.

Table 3-11 Technical specifications

Item	Description
Transceiver type	eSFP
Transmission speed	GE
Center wavelength (nm)	1550
Standards compliance	1000BASE-ZX
Connector type	LC
Applicable cable and maximum transmission distance	Single-mode fiber: 80 km
Transmit power (dBm)	-2.0 to +5.0
Maximum receiver sensitivity (dBm)	-23
Overload power (dBm)	-3.0
Extinction ratio (dB)	9
Operating temperature	0°C to 70°C (32°F to 158°F)
Part number	02317348

3.2.6 eSFP-GE-ZX100-SM1550

Table 3-12 Technical specifications

Item	Description
Transceiver form factor	eSFP
Transmission speed	GE
Center wavelength (nm)	1550
Standards compliance	1000BASE-ZX
Connector type	LC
Applicable cable and maximum transmission distance	Single-mode fiber: 100 km
Transmit power (dBm)	0 to 5

Copyright © Huawei Technologies Co., Ltd.

Item	Description
Maximum receiver sensitivity (dBm)	-30.0
Overload power (dBm)	-9.0
Extinction ratio (dB)	9.5
Operating temperature	0°C to 70°C (32°F to 158°F)
Part number	02315206

3.2.7 SFP-GE-LX-SM1310-BIDI (Single-Fiber-Bidirectional Module)

Table 3-13 Technical specifications

Item	Description
Transceiver type	eSFP
Transmission speed	GE
Center wavelength (nm)	Rx: 1490/Tx: 1310
Standards compliance	1000BASE-BX10
Connector type	LC
Applicable cable and maximum transmission distance	Single-mode fiber: 10 km
Transmit power (dBm)	-9.0 to -3.0
Maximum receiver sensitivity (dBm)	-19.5
Overload power (dBm)	-3.0
Extinction ratio (dB)	6
Operating temperature	0°C to 70°C (32°F to 158°F)
Part number	02315285

NOTE

Single-fiber bidirectional (BIDI) optical modules must be used in pairs. For example, SFP-GE-LX-SM1310-BIDI must be used with SFP-GE-LX-SM1490-BIDI.

 Copyright © Huawei Technologies Co., Ltd.

3.2.8 SFP-GE-LX-SM1490-BIDI (Single-Fiber-Bidirectional Module)

Table 3-14 Technical specifications

Item	Description
Transceiver type	eSFP
Transmission speed	GE
Center wavelength (nm)	Rx: 1310/Tx: 1490
Standards compliance	1000BASE-BX10
Connector type	LC
Applicable cable and maximum transmission distance	Single-mode fiber: 10 km
Transmit power (dBm)	-9.0 to -3.0
Maximum receiver sensitivity (dBm)	-19.5
Overload power (dBm)	-3.0
Extinction ratio (dB)	6
Operating temperature	0°C to 70°C (32°F to 158°F)
Part number	02315286

NOTE

Single-fiber bidirectional (BIDI) optical modules must be used in pairs. For example, SFP-GE-LX-SM1490-BIDI must be used with SFP-GE-LX-SM1310-BIDI.

3.2.9 LE2MGSC40DE0 (Single-Fiber-Bidirectional Module)

Table 3-15 Technical specifications

Item	Description
Transceiver form factor	eSFP
Transmission speed	GE
Center wavelength (nm)	Rx: 1490/Tx: 1310

Copyright © Huawei Technologies Co., Ltd.

Item	Description
Standards compliance	1000BASE-BX
Connector type	LC
Applicable cable and maximum transmission distance	Single-mode fiber: 40 km
Transmit power (dBm)	-2.0 to +3.0
Maximum receiver sensitivity (dBm)	-23
Overload power (dBm)	-3.0
Extinction ratio (dB)	9
Operating temperature	0°C to 70°C (32°F to 158°F)
Part number	02310KVV

NOTE

Single-fiber bidirectional (BIDI) optical modules must be used in pairs. For example, LE2MGSC40DE0 must be used with LE2MGSC40ED0.

3.2.10 LE2MGSC40ED0 (Single-Fiber-Bidirectional Module)

Table 3-16 Technical specifications

Item	Description
Transceiver form factor	eSFP
Transmission speed	GE
Center wavelength (nm)	Rx: 1310/Tx: 1490
Standards compliance	1000BASE-BX
Connector type	LC
Applicable cable and maximum transmission distance	Single-mode fiber: 40 km
Transmit power (dBm)	-2.0 to +3.0
Maximum receiver sensitivity (dBm)	-23
Overload power (dBm)	-3.0

 Copyright © Huawei Technologies Co., Ltd.

Item	Description
Extinction ratio (dB)	9
Operating temperature	0°C to 70°C (32°F to 158°F)
Part number	02310KVU

NOTE

Single-fiber bidirectional (BIDI) optical modules must be used in pairs. For example, LE2MGSC40ED0 must be used with LE2MGSC40DE0.

3.2.11 SFP-GE-ZBXD1 (Single-Fiber-Bidirectional Module)

Table 3-17 Technical specifications

Item	Description
Transceiver type	eSFP
Transmission speed	GE
Center wavelength (nm)	Rx: 1490/Tx: 1570
Standards compliance	Non-standard
Connector type	LC
Applicable cable and maximum transmission distance	Single-mode fiber: 80 km
Transmit power (dBm)	-2.0 to +4.0
Maximum receiver sensitivity (dBm)	-26
Overload power (dBm)	-3.0
Extinction ratio (dB)	9
Operating temperature	0°C to 70°C (32°F to 158°F)
Part number	02311DDB

NOTE

This module can only be used on a switch running V200R008C00 or a later version. A switch running an earlier version may fail to obtain information about this module.

Single-fiber bidirectional (BIDI) optical modules must be used in pairs. For example, SFP-GE-ZBXD1 must be used with SFP-GE-ZBXU1.

 Copyright © Huawei Technologies Co., Ltd.

3.2.12 SFP-GE-ZBXU1 (Single-Fiber-Bidirectional Module)

Table 3-18 Technical specifications

Item	Description
Transceiver type	eSFP
Transmission speed	GE
Center wavelength (nm)	Rx: 1570/Tx: 1490
Standards compliance	Non-standard
Connector type	LC
Applicable cable and maximum transmission distance	Single-mode fiber: 80 km
Transmit power (dBm)	-2.0 to +4.0
Maximum receiver sensitivity (dBm)	-26
Overload power (dBm)	-3.0
Extinction ratio (dB)	9
Operating temperature	0°C to 70°C (32°F to 158°F)
Part number	02311DDC

NOTE

This module can only be used on a switch running V200R008C00 or a later version. A switch running an earlier version may fail to obtain information about this module.

Single-fiber bidirectional (BIDI) optical modules must be used in pairs. For example, SFP-GE-ZBXU1 must be used with SFP-GE-ZBXD1.

3.2.13 SFP-GE-BXU1-SC (Single-Fiber-Bidirectional Module)

Table 3-19 Technical specifications

Item	Description
Transceiver form factor	eSFP
Transmission speed	GE
Center wavelength (nm)	Rx: 1310/Tx: 1490

Copyright © Huawei Technologies Co., Ltd.

Item	Description
Standards compliance	Non-standard
Connector type	SC
Applicable cable and maximum transmission distance	Single-mode fiber: 10 km
Transmit power (dBm)	-9.0 to -3.0
Maximum receiver sensitivity (dBm)	-19.5
Overload power (dBm)	-3.0
Extinction ratio (dB)	9
Operating temperature	0°C to 70°C (32°F to 158°F)
Part number	02310TQH

3.3 GE CSFP Optical Modules

3.3.1 CSFP-GE-FE-BXD1

Table 3-20 Technical specifications

Item	Description
Transceiver form factor	CSFP
Transmission speed	FE/GE auto-sensing
Center wavelength (nm)	Rx: 1310/Tx: 1490
Standards compliance	1000BASE-BX10
Connector type	LC
Applicable cable and maximum transmission distance	Single-mode fiber: 10 km
Transmit power (dBm)	-9.0 to -3.0
Maximum receiver sensitivity (dBm)	-23
Overload power (dBm)	-3.0

 Copyright © Huawei Technologies Co., Ltd.

Item	Description
Extinction ratio (dB)	6.6
Operating temperature	0°C to 70°C (32°F to 158°F)
Part number	02310TEE

NOTE

If a CSFP optical module is installed on a switch that does not support it, the switch cannot detect whether the optical module is present.

3.3.2 CSFP-GE-FE-BIDI2

Table 3-21 Technical specifications

Item	Description
Transceiver form factor	CSFP
Transmission speed	FE/GE auto-sensing
Center wavelength (nm)	Rx: 1310/Tx: 1490
Standards compliance	Non-standard
Connector type	LC
Applicable cable and maximum transmission distance	Single-mode fiber: 20 km
Transmit power (dBm)	-9.0 to -3.0
Maximum receiver sensitivity (dBm)	-23
Overload power (dBm)	-3.0
Extinction ratio (dB)	6.6
Operating temperature	0°C to 70°C (32°F to 158°F)
Part number	02310WRR

NOTE

If a CSFP optical module is installed on a switch that does not support it, the switch cannot detect whether the optical module is present.

 Copyright © Huawei Technologies Co., Ltd.

3.3.3 CSFP-GE-FE-BIDI4

Table 3-22 Technical specifications

Item	Description
Transceiver form factor	CSFP
Transmission speed	FE/GE auto-sensing
Center wavelength (nm)	Rx: 1310/Tx: 1490
Standards compliance	1000BASE-BX
Connector type	LC
Applicable cable and maximum transmission distance	Single-mode fiber: 40 km
Transmit power (dBm)	-5.0 to 0
Maximum receiver sensitivity (dBm)	-25
Overload power (dBm)	0
Extinction ratio (dB)	6.6
Operating temperature	-40°C to +85°C (-40°F to +185°F)
Part number	02310XQV

NOTE

If a CSFP optical module is installed on a switch that does not support it, the switch cannot detect whether the optical module is present.

3.4 GE-CWDM eSFP Optical Modules

3.4.1 CWDM-SFPGE-1471

Table 3-23 Technical specifications

Item	Description
Transceiver form factor	eSFP
Transmission speed	GE

Copyright © Huawei Technologies Co., Ltd.

Item	Description
Center wavelength (nm)	1471
Standards compliance	GE-CWDM
Connector type	LC
Applicable cable and maximum transmission distance	Single-mode fiber: 80 km
Transmit power (dBm)	0 to 5.0
Maximum receiver sensitivity (dBm)	-28.0
Overload power (dBm)	-9.0
Extinction ratio (dB)	8.5
Operating temperature	0°C to 70°C (32°F to 158°F)
Part number	02310LPN

3.4.2 CWDM-SFPGE-1491

Table 3-24 Technical specifications

Item	Description
Transceiver form factor	eSFP
Transmission speed	GE
Center wavelength (nm)	1491
Standards compliance	GE-CWDM
Connector type	LC
Applicable cable and maximum transmission distance	Single-mode fiber: 80 km
Transmit power (dBm)	0 to 5.0
Maximum receiver sensitivity (dBm)	-28.0
Overload power (dBm)	-9.0
Extinction ratio (dB)	8.5

 Copyright © Huawei Technologies Co., Ltd.

Item	Description
Operating temperature	0°C to 70°C (32°F to 158°F)
Part number	02310LPK

3.4.3 CWDM-SFPGE-1511

Table 3-25 Technical specifications

Item	Description
Transceiver form factor	eSFP
Transmission speed	GE
Center wavelength (nm)	1511
Standards compliance	GE-CWDM
Connector type	LC
Applicable cable and maximum transmission distance	Single-mode fiber: 80 km
Transmit power (dBm)	0 to 5.0
Maximum receiver sensitivity (dBm)	-28.0
Overload power (dBm)	-9.0
Extinction ratio (dB)	8.5
Operating temperature	0°C to 70°C (32°F to 158°F)
Part number	02310LPH

3.4.4 CWDM-SFPGE-1531

Table 3-26 Technical specifications

Item	Description
Transceiver form factor	eSFP
Transmission speed	GE

Copyright © Huawei Technologies Co., Ltd.

Item	Description
Center wavelength (nm)	1531
Standards compliance	GE-CWDM
Connector type	LC
Applicable cable and maximum transmission distance	Single-mode fiber: 80 km
Transmit power (dBm)	0 to 5.0
Maximum receiver sensitivity (dBm)	-28.0
Overload power (dBm)	-9.0
Extinction ratio (dB)	8.5
Operating temperature	0°C to 70°C (32°F to 158°F)
Part number	02310LPL

3.4.5 CWDM-SFPGE-1551

Table 3-27 Technical specifications

Item	Description
Transceiver form factor	eSFP
Transmission speed	GE
Center wavelength (nm)	1551
Standards compliance	GE-CWDM
Connector type	LC
Applicable cable and maximum transmission distance	Single-mode fiber: 80 km
Transmit power (dBm)	0 to 5.0
Maximum receiver sensitivity (dBm)	-28.0
Overload power (dBm)	-9.0
Extinction ratio (dB)	8.5

 Copyright © Huawei Technologies Co., Ltd.

Item	Description
Operating temperature	0°C to 70°C (32°F to 158°F)
Part number	02312AXN

3.4.6 CWDM-SFPGE-1571

Table 3-28 Technical specifications

Item	Description
Transceiver form factor	eSFP
Transmission speed	GE
Center wavelength (nm)	1571
Standards compliance	GE-CWDM
Connector type	LC
Applicable cable and maximum transmission distance	Single-mode fiber: 80 km
Transmit power (dBm)	0 to 5.0
Maximum receiver sensitivity (dBm)	-28.0
Overload power (dBm)	-9.0
Extinction ratio (dB)	8.5
Operating temperature	0°C to 70°C (32°F to 158°F)
Part number	02312AXM

3.4.7 CWDM-SFPGE-1591

Table 3-29 Technical specifications

Item	Description
Transceiver form factor	eSFP
Transmission speed	GE

Copyright © Huawei Technologies Co., Ltd.

Item	Description
Center wavelength (nm)	1591
Standards compliance	GE-CWDM
Connector type	LC
Applicable cable and maximum transmission distance	Single-mode fiber: 80 km
Transmit power (dBm)	0 to 5.0
Maximum receiver sensitivity (dBm)	-28.0
Overload power (dBm)	-9.0
Extinction ratio (dB)	8.5
Operating temperature	0°C to 70°C (32°F to 158°F)
Part number	02312AXK

3.4.8 CWDM-SFPGE-1611

Table 3-30 Technical specifications

Item	Description
Transceiver form factor	eSFP
Transmission speed	GE
Center wavelength (nm)	1611
Standards compliance	GE-CWDM
Connector type	LC
Applicable cable and maximum transmission distance	Single-mode fiber: 80 km
Transmit power (dBm)	0 to 5.0
Maximum receiver sensitivity (dBm)	-28.0
Overload power (dBm)	-9.0
Extinction ratio (dB)	8.5

 Copyright © Huawei Technologies Co., Ltd.

Item	Description
Operating temperature	0°C to 70°C (32°F to 158°F)
Part number	02310LPJ

3.5 GE-CWDM eSFP Optical Modules (Used Only in the OADM scenario)

3.5.1 CWDM-SFPGE-1271

Table 3-31 Technical specifications

Item	Description
Transceiver form factor	eSFP
Transmission speed	GE
Center wavelength (nm)	1271
Standards compliance	GE-CWDM
Connector type	LC
Applicable cable and maximum transmission distance	Single-mode fiber: 80 km
Transmit power (dBm)	0 to 5.0
Maximum receiver sensitivity (dBm)	-28.0
Overload power (dBm)	-9.0
Extinction ratio (dB)	8.5
Operating temperature	-5°C to +75°C (23°F to 167°F)
Part number	02312AXC

3.5.2 CWDM-SFPGE-1291

Copyright © Huawei Technologies Co., Ltd.

Table 3-32 Technical specifications

Item	Description
Transceiver form factor	eSFP
Transmission speed	GE
Center wavelength (nm)	1291
Standards compliance	GE-CWDM
Connector type	LC
Applicable cable and maximum transmission distance	Single-mode fiber: 80 km
Transmit power (dBm)	0 to 5.0
Maximum receiver sensitivity (dBm)	-28.0
Overload power (dBm)	-9.0
Extinction ratio (dB)	8.5
Operating temperature	-5°C to +75°C (23°F to 167°F)
Part number	02312AXB

3.5.3 CWDM-SFPGE-1311

Table 3-33 Technical specifications

Item	Description
Transceiver form factor	eSFP
Transmission speed	GE
Center wavelength (nm)	1311
Standards compliance	GE-CWDM
Connector type	LC
Applicable cable and maximum transmission distance	Single-mode fiber: 80 km
Transmit power (dBm)	0 to 5.0

Copyright © Huawei Technologies Co., Ltd.

Item	Description
Maximum receiver sensitivity (dBm)	-28.0
Overload power (dBm)	-9.0
Extinction ratio (dB)	8.5
Operating temperature	-5°C to +75°C (23°F to 167°F)
Part number	02312AXA

3.5.4 CWDM-SFPGE-1331

Table 3-34 Technical specifications

Item	Description
Transceiver form factor	eSFP
Transmission speed	GE
Center wavelength (nm)	1331
Standards compliance	GE-CWDM
Connector type	LC
Applicable cable and maximum transmission distance	Single-mode fiber: 80 km
Transmit power (dBm)	0 to 5.0
Maximum receiver sensitivity (dBm)	-28.0
Overload power (dBm)	-9.0
Extinction ratio (dB)	8.5
Operating temperature	-5°C to +75°C (23°F to 167°F)
Part number	02312AWY

3.5.5 CWDM-SFPGE-1351

Copyright © Huawei Technologies Co., Ltd.

Table 3-35 Technical specifications

Item	Description
Transceiver form factor	eSFP
Transmission speed	GE
Center wavelength (nm)	1351
Standards compliance	GE-CWDM
Connector type	LC
Applicable cable and maximum transmission distance	Single-mode fiber: 80 km
Transmit power (dBm)	0 to 5.0
Maximum receiver sensitivity (dBm)	-28.0
Overload power (dBm)	-9.0
Extinction ratio (dB)	8.5
Operating temperature	-5°C to +75°C (23°F to 167°F)
Part number	02312AWX

3.5.6 CWDM-SFPGE-1371

Table 3-36 Technical specifications

Item	Description
Transceiver form factor	eSFP
Transmission speed	GE
Center wavelength (nm)	1371
Standards compliance	GE-CWDM
Connector type	LC
Applicable cable and maximum transmission distance	Single-mode fiber: 80 km
Transmit power (dBm)	0 to 5.0

Copyright © Huawei Technologies Co., Ltd.

Item	Description
Maximum receiver sensitivity (dBm)	-28.0
Overload power (dBm)	-9.0
Extinction ratio (dB)	8.5
Operating temperature	-5°C to +75°C (23°F to 167°F)
Part number	02312AWW

3.5.7 CWDM-SFPGE-1391

Table 3-37 Technical specifications

Item	Description
Transceiver form factor	eSFP
Transmission speed	GE
Center wavelength (nm)	1391
Standards compliance	GE-CWDM
Connector type	LC
Applicable cable and maximum transmission distance	Single-mode fiber: 80 km
Transmit power (dBm)	0 to 5.0
Maximum receiver sensitivity (dBm)	-28.0
Overload power (dBm)	-9.0
Extinction ratio (dB)	8.5
Operating temperature	-5°C to +75°C (23°F to 167°F)
Part number	02312AWV

3.5.8 CWDM-SFPGE-1411

 Copyright © Huawei Technologies Co., Ltd.

Table 3-38 Technical specifications

Item	Description
Transceiver form factor	eSFP
Transmission speed	GE
Center wavelength (nm)	1411
Standards compliance	GE-CWDM
Connector type	LC
Applicable cable and maximum transmission distance	Single-mode fiber: 80 km
Transmit power (dBm)	0 to 5.0
Maximum receiver sensitivity (dBm)	-28.0
Overload power (dBm)	-9.0
Extinction ratio (dB)	8.5
Operating temperature	-5°C to +75°C (23°F to 167°F)
Part number	02312AWU

3.5.9 CWDM-SFPGE-1431

Table 3-39 Technical specifications

Item	Description
Transceiver form factor	eSFP
Transmission speed	GE
Center wavelength (nm)	1431
Standards compliance	GE-CWDM
Connector type	LC
Applicable cable and maximum transmission distance	Single-mode fiber: 80 km
Transmit power (dBm)	0 to 5.0

Copyright © Huawei Technologies Co., Ltd.

Item	Description
Maximum receiver sensitivity (dBm)	-28.0
Overload power (dBm)	-9.0
Extinction ratio (dB)	8.5
Operating temperature	-5°C to +75°C (23°F to 167°F)
Part number	02312AWT

3.5.10 CWDM-SFPGE-1451

Table 3-40 Technical specifications

Item	Description
Transceiver form factor	eSFP
Transmission speed	GE
Center wavelength (nm)	1451
Standards compliance	GE-CWDM
Connector type	LC
Applicable cable and maximum transmission distance	Single-mode fiber: 80 km
Transmit power (dBm)	0 to 5.0
Maximum receiver sensitivity (dBm)	-28.0
Overload power (dBm)	-9.0
Extinction ratio (dB)	8.5
Operating temperature	-5°C to +75°C (23°F to 167°F)
Part number	02312AWS

3.5.11 CWDM-SFPGE-1471

Copyright © Huawei Technologies Co., Ltd.

Table 3-41 Technical specifications

Item	Description
Transceiver form factor	eSFP
Transmission speed	GE
Center wavelength (nm)	1471
Standards compliance	GE-CWDM
Connector type	LC
Applicable cable and maximum transmission distance	Single-mode fiber: 80 km
Transmit power (dBm)	0 to 5.0
Maximum receiver sensitivity (dBm)	-28.0
Overload power (dBm)	-9.0
Extinction ratio (dB)	8.5
Operating temperature	0°C to 70°C (32°F to 158°F)
Part number	02310LPN

3.5.12 CWDM-SFPGE-1491

Table 3-42 Technical specifications

Item	Description
Transceiver form factor	eSFP
Transmission speed	GE
Center wavelength (nm)	1491
Standards compliance	GE-CWDM
Connector type	LC
Applicable cable and maximum transmission distance	Single-mode fiber: 80 km
Transmit power (dBm)	0 to 5.0

 Copyright © Huawei Technologies Co., Ltd.

Item	Description
Maximum receiver sensitivity (dBm)	-28.0
Overload power (dBm)	-9.0
Extinction ratio (dB)	8.5
Operating temperature	0°C to 70°C (32°F to 158°F)
Part number	02310LPK

3.5.13 CWDM-SFPGE-1511

Table 3-43 Technical specifications

Item	Description
Transceiver form factor	eSFP
Transmission speed	GE
Center wavelength (nm)	1511
Standards compliance	GE-CWDM
Connector type	LC
Applicable cable and maximum transmission distance	Single-mode fiber: 80 km
Transmit power (dBm)	0 to 5.0
Maximum receiver sensitivity (dBm)	-28.0
Overload power (dBm)	-9.0
Extinction ratio (dB)	8.5
Operating temperature	0°C to 70°C (32°F to 158°F)
Part number	02310LPH

3.5.14 CWDM-SFPGE-1531

Copyright © Huawei Technologies Co., Ltd.

Table 3-44 Technical specifications

Item	Description
Transceiver form factor	eSFP
Transmission speed	GE
Center wavelength (nm)	1531
Standards compliance	GE-CWDM
Connector type	LC
Applicable cable and maximum transmission distance	Single-mode fiber: 80 km
Transmit power (dBm)	0 to 5.0
Maximum receiver sensitivity (dBm)	-28.0
Overload power (dBm)	-9.0
Extinction ratio (dB)	8.5
Operating temperature	0°C to 70°C (32°F to 158°F)
Part number	02310LPL

3.5.15 CWDM-SFPGE-1551

Table 3-45 Technical specifications

Item	Description
Transceiver form factor	eSFP
Transmission speed	GE
Center wavelength (nm)	1551
Standards compliance	GE-CWDM
Connector type	LC
Applicable cable and maximum transmission distance	Single-mode fiber: 80 km
Transmit power (dBm)	0 to 5.0

Copyright © Huawei Technologies Co., Ltd.

Item	Description
Maximum receiver sensitivity (dBm)	-28.0
Overload power (dBm)	-9.0
Extinction ratio (dB)	8.5
Operating temperature	0°C to 70°C (32°F to 158°F)
Part number	02312AXN

3.5.16 CWDM-SFPGE-1571

Table 3-46 Technical specifications

Item	Description
Transceiver form factor	eSFP
Transmission speed	GE
Center wavelength (nm)	1571
Standards compliance	GE-CWDM
Connector type	LC
Applicable cable and maximum transmission distance	Single-mode fiber: 80 km
Transmit power (dBm)	0 to 5.0
Maximum receiver sensitivity (dBm)	-28.0
Overload power (dBm)	-9.0
Extinction ratio (dB)	8.5
Operating temperature	0°C to 70°C (32°F to 158°F)
Part number	02312AXM

3.5.17 CWDM-SFPGE-1591

Copyright © Huawei Technologies Co., Ltd.

Table 3-47 Technical specifications

Item	Description
Transceiver form factor	eSFP
Transmission speed	GE
Center wavelength (nm)	1591
Standards compliance	GE-CWDM
Connector type	LC
Applicable cable and maximum transmission distance	Single-mode fiber: 80 km
Transmit power (dBm)	0 to 5.0
Maximum receiver sensitivity (dBm)	-28.0
Overload power (dBm)	-9.0
Extinction ratio (dB)	8.5
Operating temperature	0°C to 70°C (32°F to 158°F)
Part number	02312AXK

3.5.18 CWDM-SFPGE-1611

Table 3-48 Technical specifications

Item	Description
Transceiver form factor	eSFP
Transmission speed	GE
Center wavelength (nm)	1611
Standards compliance	GE-CWDM
Connector type	LC
Applicable cable and maximum transmission distance	Single-mode fiber: 80 km
Transmit power (dBm)	0 to 5.0

Copyright © Huawei Technologies Co., Ltd.

Item	Description
Maximum receiver sensitivity (dBm)	-28.0
Overload power (dBm)	-9.0
Extinction ratio (dB)	8.5
Operating temperature	0°C to 70°C (32°F to 158°F)
Part number	02310LPJ

3.6 GE-DWDM eSFP Optical Modules

3.6.1 DWDM-SFPGE-1560-61

Table 3-49 Technical specifications

Item	Description
Transceiver form factor	eSFP
Transmission speed	GE
Center wavelength (nm)	1560.61
Standards compliance	GE-DWDM
Connector type	LC
Applicable cable and maximum transmission distance	Single-mode fiber: 120 km
Transmit power (dBm)	0 to 4.0
Maximum receiver sensitivity (dBm)	-28.0
Overload power (dBm)	-8.0
Extinction ratio (dB)	8.2
Operating temperature	0°C to 70°C (32°F to 158°F)
Part number	02310LLE

3.7 10GE SFP+ Optical Modules

Copyright © Huawei Technologies Co., Ltd.

3.7.1 SFP-10G-USR

Table 3-50 Technical specifications

Item	Description
Transceiver form factor	SFP+
Transmission speed	10GE
Center wavelength (nm)	850
Standards compliance	10GBASE-USR (non-standard)
Connector type	LC
Applicable cable and maximum transmission distance	Multimode fiber (OM3): 0.1 km
Transmit power (dBm)	-7.3 to -1.0
Maximum receiver sensitivity (dBm)	-10.7
Overload power (dBm)	0.5
Extinction ratio (dB)	3.0
Operating temperature	0°C to 70°C (32°F to 158°F)
Part number	02310MNW

3.7.2 OSXD22N00

Table 3-51 Technical Specifications

Item	Description
Transceiver form factor	SFP+
Transmission speed	10GE
Center wavelength (nm)	1310
Standards compliance	10GBASE-LRM
Connector type	LC

Copyright © Huawei Technologies Co., Ltd.

Item	Description
Applicable cable and maximum transmission distance	• Multimode fiber (with modal bandwidth of 400 MHz*km and diameter of 50 μm): 0.1 km • Multimode fiber (with modal bandwidth of 500 MHz*km and diameter of 62.5 μm): 0.22 km • Multimode fiber (OM1, OM2, OM3): 0.22 km
Transmit power (dBm)	-6.5 to +0.5
Maximum receiver sensitivity (dBm)	-6.5
Overload power (dBm)	1.5
Extinction ratio (dB)	3.5
Operating temperature	0°C to 70°C (32°F to 158°F)
Part number	02310CRM

3.7.3 OMXD30000

Table 3-52 Technical Specifications

Item	Description
Transceiver form factor	SFP+
Transmission speed	10GE
Center wavelength (nm)	850
Standards compliance	10GBASE-SR
Connector type	LC
Applicable cable and maximum transmission distance	• Multimode fiber (with modal bandwidth of 160 MHz*km and diameter of 62.5 μm): 0.026 km • Multimode fiber (OM1): 0.033 km • Multimode fiber (with modal bandwidth of 400 MHz*km and diameter of 50 μm): 0.066 km • Multimode fiber (OM2): 0.082 km • Multimode fiber (OM3): 0.3 km • Multimode fiber (OM4): 0.4 km
Transmit power (dBm)	-7.3 to -1.0
Maximum receiver sensitivity (dBm)	-11.1

 Copyright © Huawei Technologies Co., Ltd.

Item	Description
Overload power (dBm)	-1.0
Extinction ratio (dB)	3.0
Operating temperature	0°C to 70°C (32°F to 158°F)
Part number	02318169

3.7.4 SFP-10G-iLR

Table 3-53 Technical specifications

Item	Description
Transceiver form factor	SFP+
Transmission speed	10GE
Center wavelength (nm)	1310
Standards compliance	10GBASE-iLR (non-standard)
Connector type	LC
Applicable cable and maximum transmission distance	Single-mode fiber: 1.4 km
Transmit power (dBm)	-8.2 to +0.5
Maximum receiver sensitivity (dBm)	-14.4
Overload power (dBm)	0.5
Extinction ratio (dB)	3.5
Operating temperature	-40°C to +85°C (-40°F to +185°F)
Part number	02311BJJ

NOTE

This module can only be used on a switch running V200R008C00 or a later version. A switch running an earlier version may fail to obtain information about this module.

3.7.5 OSX010000

Copyright © Huawei Technologies Co., Ltd.

Table 3-54 Technical Specifications

Item	Description
Transceiver form factor	SFP+
Transmission speed	10GE
Center wavelength (nm)	1310
Standards compliance	10GBASE-LR
Connector type	LC
Applicable cable and maximum transmission distance	Single-mode fiber: 10 km
Transmit power (dBm)	-8.2 to +0.5
Maximum receiver sensitivity (dBm)	-12.6
Overload power (dBm)	0.5
Extinction ratio (dB)	3.5
Operating temperature	0°C to 70°C (32°F to 158°F)
Part number	02318170

3.7.6 OSX040N01

Table 3-55 Technical Specifications

Item	Description
Transceiver form factor	SFP+
Transmission speed	10GE
Center wavelength (nm)	1550
Standards compliance	10GBASE-ER
Connector type	LC
Applicable cable and maximum transmission distance	Single-mode fiber: 40 km
Transmit power (dBm)	-4.7 to +4.0

 Copyright © Huawei Technologies Co., Ltd.

Item	Description
Maximum receiver sensitivity (dBm)	-14.1
Overload power (dBm)	-1.0
Extinction ratio (dB)	3.0
Operating temperature	0°C to 70°C (32°F to 158°F)
Part number	02310CNF

3.7.7 SFP-10G-ER-1310

Table 3-56 Technical Specifications

Item	Description
Transceiver form factor	SFP+
Transmission speed	10GE
Center wavelength (nm)	1310
Standards compliance	Non-standard and compatible with the 10Gbase-ER
Connector type	LC
Applicable cable and maximum transmission distance	Single-mode fiber: 40 km
Transmit power (dBm)	-2.0 to +4.0
Maximum receiver sensitivity (dBm)	-20
Overload power (dBm)	-7.0
Extinction ratio (dB)	3.5
Operating temperature	0°C to 70°C (32°F to 158°F)
Part number	02311RLX

NOTE

If the SFP-10G-ER-1310 is connected to a 10Gbase-ER standard optical module (1550nm, 10GE, 40km), the maximum transmission distance is only 20km due to different specifications such as wavelength and receiving sensitivity.

This module can only be used on a switch running V200R010C00 or a later version.

 Copyright © Huawei Technologies Co., Ltd.

3.7.8 SFP-10G-ZR

Table 3-57 Technical specifications

Item	Description
Transceiver form factor	SFP+
Transmission speed	10GE
Center wavelength (nm)	1550
Standards compliance	10GBASE-ZR
Connector type	LC
Applicable cable and maximum transmission distance	Single-mode fiber: 80 km
Transmit power (dBm)	0 to 4.0
Maximum receiver sensitivity (dBm)	-24.0
Overload power (dBm)	-7.0
Extinction ratio (dB)	9
Operating temperature	0°C to 70°C (32°F to 158°F)
Part number	02310SNN

3.7.9 SFP-10G-BXU1 (Single-Fiber-Bidirectional Module)

Table 3-58 Technical specifications

Item	Description
Transceiver form factor	SFP+
Transmission speed	10GE
Center wavelength (nm)	Rx: 1330/Tx: 1270
Standards compliance	10GBASE-BX
Connector type	LC
Applicable cable and maximum transmission distance	Single-mode fiber: 10 km

Copyright © Huawei Technologies Co., Ltd.

Item	Description
Transmit power (dBm)	-8.2 to +0.5
Maximum receiver sensitivity (dBm)	-14.4
Overload power (dBm)	0.5
Extinction ratio (dB)	3.5
Operating temperature	-40°C to +85°C (-40°F to +185°F)
Part number	02310QBJ

NOTE

Single-fiber bidirectional (BIDI) optical modules must be used in pairs. For example, SFP-10G-BXU1 must be used with SFP-10G-BXD1.

3.7.10 SFP-10G-BXD1 (Single-Fiber-Bidirectional Module)

Table 3-59 Technical specifications

Item	Description
Transceiver form factor	SFP+
Transmission speed	10GE
Center wavelength (nm)	Rx: 1270/Tx: 1330
Standards compliance	10GBASE-BX
Connector type	LC
Applicable cable and maximum transmission distance	Single-mode fiber: 10 km
Transmit power (dBm)	-8.2 to +0.5
Maximum receiver sensitivity (dBm)	-14.4
Overload power (dBm)	0.5
Extinction ratio (dB)	3.5
Operating temperature	-40°C to +85°C (-40°F to +185°F)
Part number	02310QDT

 Copyright © Huawei Technologies Co., Ltd.

NOTE

Single-fiber bidirectional (BIDI) optical modules must be used in pairs. For example, SFP-10G-BXD1 must be used with SFP-10G-BXU1.

3.7.11 SFP-10G-ER-SM1330-BIDI (Single-Fiber-Bidirectional Module)

Table 3-60 Technical specifications

Item	Description
Transceiver form factor	SFP+
Transmission speed	10GE
Center wavelength (nm)	Rx: 1270/Tx: 1330
Standards compliance	10GBASE-BX
Connector type	LC
Applicable cable and maximum transmission distance	Single-mode fiber: 40 km
Transmit power (dBm)	0 to 5
Maximum receiver sensitivity (dBm)	-18
Overload power (dBm)	-9
Extinction ratio (dB)	3.5
Operating temperature	0°C to 70°C (32°F to 158°F)
Part number	02311BJB

NOTE

This module can only be used on a switch running V200R009C00 or a later version. A switch running an earlier version may fail to obtain information about this module.

Single-fiber bidirectional (BIDI) optical modules must be used in pairs. For example, SFP-10G-ER-SM1330-BIDI must be used with SFP-10G-ER-SM1270-BIDI.

3.7.12 SFP-10G-ER-SM1270-BIDI (Single-Fiber-Bidirectional Module)

 Copyright © Huawei Technologies Co., Ltd.

Table 3-61 Technical specifications

Item	Description
Transceiver form factor	SFP+
Transmission speed	10GE
Center wavelength (nm)	Rx: 1330/Tx: 1270
Standards compliance	10GBASE-BX
Connector type	LC
Applicable cable and maximum transmission distance	Single-mode fiber: 40 km
Transmit power (dBm)	0 to 5
Maximum receiver sensitivity (dBm)	-18
Overload power (dBm)	-9
Extinction ratio (dB)	3.5
Operating temperature	0°C to 70°C (32°F to 158°F)
Part number	02311BJC

NOTE

This module can only be used on a switch running V200R009C00 or a later version. A switch running an earlier version may fail to obtain information about this module.

Single-fiber bidirectional (BIDI) optical modules must be used in pairs. For example, SFP-10G-ER-SM1270-BIDI must be used with SFP-10G-ER-SM1330-BIDI.

3.8 10GE XFP Optical Modules

3.8.1 XFP-SX-MM850

Table 3-62 Technical specifications

Item	Description
Transceiver type	XFP
Transmission speed	10GE

 Copyright © Huawei Technologies Co., Ltd.

Item	Description
Center wavelength (nm)	850
Standards compliance	10GBASE-SR
Connector type	LC
Applicable cable and maximum transmission distance	• Multimode fiber (with modal bandwidth of 160 MHz*km and diameter of 62.5 μm): 0.026 km • Multimode fiber (OM1): 0.033 km • Multimode fiber (with modal bandwidth of 400 MHz*km and diameter of 50 μm): 0.066 km • Multimode fiber (OM2): 0.082 km • Multimode fiber (OM3): 0.3 km • Multimode fiber (OM4): 0.4 km
Transmit power (dBm)	-7.3 to -1.3
Maximum receiver sensitivity (dBm)	-7.5
Overload power (dBm)	-1
Extinction ratio (dB)	3
Operating temperature	0°C to 70°C (32°F to 158°F)
Part number	02315176

3.8.2 XFP-STM64-LX-SM1310

Table 3-63 Technical specifications

Item	Description
Transceiver type	XFP
Transmission speed	10GE
Center wavelength (nm)	1310
Standards compliance	10GBASE-LR
Connector type	LC
Applicable cable and maximum transmission distance	Single-mode fiber: 10 km

Copyright © Huawei Technologies Co., Ltd.

Item	Description
Transmit power (dBm)	-6.0 to -1.0
Maximum receiver sensitivity (dBm)	-14.4
Overload power (dBm)	0.5
Extinction ratio (dB)	6
Operating temperature	0°C to 70°C (32°F to 158°F)
Part number	02315208

3.8.3 XFP-STM64-LH40-SM1550

Table 3-64 Technical specifications

Item	Description
Transceiver type	XFP
Transmission speed	10GE
Center wavelength (nm)	1550
Standards compliance	10GBASE-ER
Connector type	LC
Applicable cable and maximum transmission distance	Single-mode fiber: 40 km
Transmit power (dBm)	-1 to +2
Maximum receiver sensitivity (dBm)	-15
Overload power (dBm)	-1
Extinction ratio (dB)	8.2
Operating temperature	0°C to 70°C (32°F to 158°F)
Part number	02315209

3.8.4 XFP-STM64-SM1550-80km

Copyright © Huawei Technologies Co., Ltd.

Table 3-65 Technical specifications

Item	Description
Transceiver type	XFP
Transmission speed	10GE
Center wavelength (nm)	1550
Standards compliance	10GBASE-ZR
Connector type	LC
Applicable cable and maximum transmission distance	Single-mode fiber: 80 km
Transmit power (dBm)	0 to 4
Maximum receiver sensitivity (dBm)	-24
Overload power (dBm)	-7
Extinction ratio (dB)	9
Operating temperature	0°C to 70°C (32°F to 158°F)
Part number	02315143

3.9 10GE-CWDM SFP+ Optical Modules

3.9.1 SFP-10G-ZCW1471

Table 3-66 Technical specifications

Item	Description
Transceiver form factor	SFP+
Transmission speed	10GE
Center wavelength (nm)	1471
Standards compliance	10G-CWDM
Connector type	LC

Copyright © Huawei Technologies Co., Ltd.

Item	Description
Applicable cable and maximum transmission distance	Single-mode fiber: 70 km
Transmit power (dBm)	0 to 4.0
Maximum receiver sensitivity (dBm)	-23.0
Overload power (dBm)	-7.0
Extinction ratio (dB)	8.2
Operating temperature	0°C to 70°C (32°F to 158°F)
Part number	02310SSG

3.9.2 SFP-10G-ZCW1491

Table 3-67 Technical specifications

Item	Description
Transceiver form factor	SFP+
Transmission speed	10GE
Center wavelength (nm)	1491
Standards compliance	10G-CWDM
Connector type	LC
Applicable cable and maximum transmission distance	Single-mode fiber: 70 km
Transmit power (dBm)	0 to 4.0
Maximum receiver sensitivity (dBm)	-23.0
Overload power (dBm)	-7.0
Extinction ratio (dB)	8.2
Operating temperature	0°C to 70°C (32°F to 158°F)
Part number	02310SSF

 Copyright © Huawei Technologies Co., Ltd.

3.9.3 SFP-10G-ZCW1511

Table 3-68 Technical specifications

Item	Description
Transceiver form factor	SFP+
Transmission speed	10GE
Center wavelength (nm)	1511
Standards compliance	10G-CWDM
Connector type	LC
Applicable cable and maximum transmission distance	Single-mode fiber: 70 km
Transmit power (dBm)	0 to 4.0
Maximum receiver sensitivity (dBm)	-23.0
Overload power (dBm)	-7.0
Extinction ratio (dB)	8.2
Operating temperature	0°C to 70°C (32°F to 158°F)
Part number	02310SSE

3.9.4 SFP-10G-ZCW1531

Table 3-69 Technical specifications

Item	Description
Transceiver form factor	SFP+
Transmission speed	10GE
Center wavelength (nm)	1531
Standards compliance	10G-CWDM
Connector type	LC
Applicable cable and maximum transmission distance	Single-mode fiber: 70 km

Copyright © Huawei Technologies Co., Ltd.

Item	Description
Transmit power (dBm)	0 to 4.0
Maximum receiver sensitivity (dBm)	-23.0
Overload power (dBm)	-7.0
Extinction ratio (dB)	8.2
Operating temperature	0°C to 70°C (32°F to 158°F)
Part number	02310SSD

3.9.5 SFP-10G-ZCW1551

Table 3-70 Technical specifications

Item	Description
Transceiver form factor	SFP+
Transmission speed	10GE
Center wavelength (nm)	1551
Standards compliance	10G-CWDM
Connector type	LC
Applicable cable and maximum transmission distance	Single-mode fiber: 70 km
Transmit power (dBm)	0 to 4.0
Maximum receiver sensitivity (dBm)	-23.0
Overload power (dBm)	-7.0
Extinction ratio (dB)	8.2
Operating temperature	0°C to 70°C (32°F to 158°F)
Part number	02310SSC

3.9.6 SFP-10G-ZCW1571

Copyright © Huawei Technologies Co., Ltd.

Table 3-71 Technical specifications

Item	Description
Transceiver form factor	SFP+
Transmission speed	10GE
Center wavelength (nm)	1571
Standards compliance	10G-CWDM
Connector type	LC
Applicable cable and maximum transmission distance	Single-mode fiber: 70 km
Transmit power (dBm)	0 to 4.0
Maximum receiver sensitivity (dBm)	-23.0
Overload power (dBm)	-7.0
Extinction ratio (dB)	8.2
Operating temperature	0°C to 70°C (32°F to 158°F)
Part number	02310SSB

3.9.7 SFP-10G-ZCW1591

Table 3-72 Technical specifications

Item	Description
Transceiver form factor	SFP+
Transmission speed	10GE
Center wavelength (nm)	1591
Standards compliance	10G-CWDM
Connector type	LC
Applicable cable and maximum transmission distance	Single-mode fiber: 70 km
Transmit power (dBm)	0 to 4.0

 Copyright © Huawei Technologies Co., Ltd.

Item	Description
Maximum receiver sensitivity (dBm)	-23.0
Overload power (dBm)	-7.0
Extinction ratio (dB)	8.2
Operating temperature	0°C to 70°C (32°F to 158°F)
Part number	02310SSA

3.9.8 SFP-10G-ZCW1611

Table 3-73 Technical specifications

Item	Description
Transceiver form factor	SFP+
Transmission speed	10GE
Center wavelength (nm)	1611
Standards compliance	10G-CWDM
Connector type	LC
Applicable cable and maximum transmission distance	Single-mode fiber: 70 km
Transmit power (dBm)	0 to 4.0
Maximum receiver sensitivity (dBm)	-23.0
Overload power (dBm)	-7.0
Extinction ratio (dB)	8.2
Operating temperature	0°C to 70°C (32°F to 158°F)
Part number	02310SRY

3.10 10GE-CWDM XFP Optical Modules

3.10.1 CWDM-XFP10G-1471

Copyright © Huawei Technologies Co., Ltd.

Table 3-74 Technical specifications

Item	Description
Transceiver form factor	XFP
Transmission speed	10GE
Center wavelength (nm)	1471
Standards compliance	10G-CWDM
Connector type	LC
Applicable cable and maximum transmission distance	Single-mode fiber: 70 km
Transmit power (dBm)	0 to 3
Maximum receiver sensitivity (dBm)	-21
Overload power (dBm)	-9
Extinction ratio (dB)	8.2
Operating temperature	0°C to 70°C (32°F to 158°F)
Part number	02310LQS

3.10.2 CWDM-XFP10G-1491

Table 3-75 Technical specifications

Item	Description
Transceiver form factor	XFP
Transmission speed	10GE
Center wavelength (nm)	1491
Standards compliance	10G-CWDM
Connector type	LC
Applicable cable and maximum transmission distance	Single-mode fiber: 70 km
Transmit power (dBm)	0 to 3

 Copyright © Huawei Technologies Co., Ltd.

Item	Description
Maximum receiver sensitivity (dBm)	-21
Overload power (dBm)	-9
Extinction ratio (dB)	8.2
Operating temperature	0°C to 70°C (32°F to 158°F)
Part number	02310LQU

3.10.3 CWDM-XFP10G-1511

Table 3-76 Technical specifications

Item	Description
Transceiver form factor	XFP
Transmission speed	10GE
Center wavelength (nm)	1511
Standards compliance	10G-CWDM
Connector type	LC
Applicable cable and maximum transmission distance	Single-mode fiber: 70 km
Transmit power (dBm)	0 to 3
Maximum receiver sensitivity (dBm)	-21
Overload power (dBm)	-9
Extinction ratio (dB)	8.2
Operating temperature	0°C to 70°C (32°F to 158°F)
Part number	02310LQV

3.10.4 CWDM-XFP10G-1531

Copyright © Huawei Technologies Co., Ltd.

Table 3-77 Technical specifications

Item	Description
Transceiver form factor	XFP
Transmission speed	10GE
Center wavelength (nm)	1531
Standards compliance	10G-CWDM
Connector type	LC
Applicable cable and maximum transmission distance	Single-mode fiber: 70 km
Transmit power (dBm)	0 to 3
Maximum receiver sensitivity (dBm)	-21
Overload power (dBm)	-9
Extinction ratio (dB)	8.2
Operating temperature	0°C to 70°C (32°F to 158°F)
Part number	02310LQX

3.10.5 CWDM-XFP10G-1551

Table 3-78 Technical specifications

Item	Description
Transceiver form factor	XFP
Transmission speed	10GE
Center wavelength (nm)	1551
Standards compliance	10G-CWDM
Connector type	LC
Applicable cable and maximum transmission distance	Single-mode fiber: 70 km
Transmit power (dBm)	0 to 3

 Copyright © Huawei Technologies Co., Ltd.

Item	Description
Maximum receiver sensitivity (dBm)	-21
Overload power (dBm)	-9
Extinction ratio (dB)	8.2
Operating temperature	0°C to 70°C (32°F to 158°F)
Part number	02310LQY

3.10.6 CWDM-XFP10G-1571

Table 3-79 Technical specifications

Item	Description
Transceiver form factor	XFP
Transmission speed	10GE
Center wavelength (nm)	1571
Standards compliance	10G-CWDM
Connector type	LC
Applicable cable and maximum transmission distance	Single-mode fiber: 70 km
Transmit power (dBm)	0 to 3
Maximum receiver sensitivity (dBm)	-21
Overload power (dBm)	-9
Extinction ratio (dB)	8.2
Operating temperature	0°C to 70°C (32°F to 158°F)
Part number	02310LRB

3.10.7 CWDM-XFP10G-1591

Copyright © Huawei Technologies Co., Ltd.

Table 3-80 Technical specifications

Item	Description
Transceiver form factor	XFP
Transmission speed	10GE
Center wavelength (nm)	1591
Standards compliance	10G-CWDM
Connector type	LC
Applicable cable and maximum transmission distance	Single-mode fiber: 70 km
Transmit power (dBm)	0 to 3
Maximum receiver sensitivity (dBm)	-21
Overload power (dBm)	-9
Extinction ratio (dB)	8.2
Operating temperature	0°C to 70°C (32°F to 158°F)
Part number	02310LRC

3.10.8 CWDM-XFP10G-1611

Table 3-81 Technical specifications

Item	Description
Transceiver form factor	XFP
Transmission speed	10GE
Center wavelength (nm)	1611
Standards compliance	10G-CWDM
Connector type	LC
Applicable cable and maximum transmission distance	Single-mode fiber: 70 km
Transmit power (dBm)	0 to 3

Copyright © Huawei Technologies Co., Ltd.

Item	Description
Maximum receiver sensitivity (dBm)	-21
Overload power (dBm)	-9
Extinction ratio (dB)	8.2
Operating temperature	0°C to 70°C (32°F to 158°F)
Part number	02310LRE

3.11 10GE-DWDM SFP+ Optical Modules

3.11.1 SFP-10G-ZDWT

Table 3-82 Technical specifications

Item	Description
Transceiver form factor	SFP+
Transmission speed	10GE
Center wavelength (nm)	1529.16 to 1560.61
Standards compliance	10GBASE-DWDM
Connector type	LC
Applicable cable and maximum transmission distance	Single-mode fiber: 60 km
Transmit power (dBm)	-1 to +3
Maximum receiver sensitivity (dBm)	-24
Overload power (dBm)	-1
Extinction ratio (dB)	8.2
Operating temperature	0°C to 70°C (32°F to 158°F)
Part number	02310YUT

Copyright © Huawei Technologies Co., Ltd.

NOTE

This module can only be used on a switch running V200R009C00 or a later version. A switch running an earlier version may fail to obtain information about this module.

The optical module takes a long time to start. Therefore, a low optical power alarm may be generated when such an optical module is installed on a switch.

3.12 10GE-DWDM XFP Optical Modules

3.12.1 DWDM-XFP10G-1533-47

Table 3-83 Technical specifications

Item	Description
Transceiver form factor	XFP
Transmission speed	10GE
Center wavelength (nm)	1533.47
Standards compliance	10G-DWDM
Connector type	LC
Applicable cable and maximum transmission distance	Single-mode fiber: 80 km
Transmit power (dBm)	-1 to +3
Maximum receiver sensitivity (dBm)	-24
Overload power (dBm)	-9
Extinction ratio (dB)	8.2
Operating temperature	0°C to 70°C (32°F to 158°F)
Part number	02310LRN

3.12.2 DWDM-XFP10G-1534-25

Table 3-84 Technical specifications

Item	Description
Transceiver form factor	XFP

 Copyright © Huawei Technologies Co., Ltd.

Item	Description
Transmission speed	10GE
Center wavelength (nm)	1534.25
Standards compliance	10G-DWDM
Connector type	LC
Applicable cable and maximum transmission distance	Single-mode fiber: 80 km
Transmit power (dBm)	-1 to +3
Maximum receiver sensitivity (dBm)	-24
Overload power (dBm)	-9
Extinction ratio (dB)	8.2
Operating temperature	0°C to 70°C (32°F to 158°F)
Part number	02310LRM

3.12.3 DWDM-XFP10G-1535-04

Table 3-85 Technical specifications

Item	Description
Transceiver form factor	XFP
Transmission speed	10GE
Center wavelength (nm)	1535.04
Standards compliance	10G-DWDM
Connector type	LC
Applicable cable and maximum transmission distance	Single-mode fiber: 80 km
Transmit power (dBm)	-1 to +3
Maximum receiver sensitivity (dBm)	-24
Overload power (dBm)	-9

 Copyright © Huawei Technologies Co., Ltd.

Item	Description
Extinction ratio (dB)	8.2
Operating temperature	0°C to 70°C (32°F to 158°F)
Part number	02310LRL

3.12.4 DWDM-XFP10G-1552-52

Table 3-86 Technical specifications

Item	Description
Transceiver form factor	XFP
Transmission speed	10GE
Center wavelength (nm)	1552.52
Standards compliance	10G-DWDM
Connector type	LC
Applicable cable and maximum transmission distance	Single-mode fiber: 80 km
Transmit power (dBm)	-1 to +3
Maximum receiver sensitivity (dBm)	-24
Overload power (dBm)	-9
Extinction ratio (dB)	8.2
Operating temperature	0°C to 70°C (32°F to 158°F)
Part number	02310LRK

3.12.5 DWDM-XFP10G-1553-33

Table 3-87 Technical specifications

Item	Description
Transceiver form factor	XFP
Transmission speed	10GE

Copyright © Huawei Technologies Co., Ltd.

Item	Description
Center wavelength (nm)	1553.33
Standards compliance	10G-DWDM
Connector type	LC
Applicable cable and maximum transmission distance	Single-mode fiber: 80 km
Transmit power (dBm)	-1 to +3
Maximum receiver sensitivity (dBm)	-24
Overload power (dBm)	-9
Extinction ratio (dB)	8.2
Operating temperature	0°C to 70°C (32°F to 158°F)
Part number	02310LRJ

3.12.6 DWDM-XFP10G-1554-13

Table 3-88 Technical specifications

Item	Description
Transceiver form factor	XFP
Transmission speed	10GE
Center wavelength (nm)	1554.13
Standards compliance	10G-DWDM
Connector type	LC
Applicable cable and maximum transmission distance	Single-mode fiber: 80 km
Transmit power (dBm)	-1 to +3
Maximum receiver sensitivity (dBm)	-24
Overload power (dBm)	-9
Extinction ratio (dB)	8.2

 Copyright © Huawei Technologies Co., Ltd.

Item	Description
Operating temperature	0°C to 70°C (32°F to 158°F)
Part number	02310LRH

3.12.7 DWDM-XFP10G-1530-33

Table 3-89 Technical specifications

Item	Description
Transceiver form factor	XFP
Transmission speed	10GE
Center wavelength (nm)	1530.33
Standards compliance	10G-DWDM
Connector type	LC
Applicable cable and maximum transmission distance	Single-mode fiber: 80 km
Transmit power (dBm)	-1 to +3
Maximum receiver sensitivity (dBm)	-24
Overload power (dBm)	-9
Extinction ratio (dB)	8.2
Operating temperature	0°C to 70°C (32°F to 158°F)
Part number	02310LPW

3.12.8 DWDM-XFP10G-1549-32

Table 3-90 Technical specifications

Item	Description
Transceiver form factor	XFP
Transmission speed	10GE

Copyright © Huawei Technologies Co., Ltd.

Item	Description
Center wavelength (nm)	1549.32
Standards compliance	10G-DWDM
Connector type	LC
Applicable cable and maximum transmission distance	Single-mode fiber: 80 km
Transmit power (dBm)	-1 to +3
Maximum receiver sensitivity (dBm)	-24
Overload power (dBm)	-9
Extinction ratio (dB)	8.2
Operating temperature	0°C to 70°C (32°F to 158°F)
Part number	02310LPV

3.12.9 DWDM-XFP10G-1531-12

Table 3-91 Technical specifications

Item	Description
Transceiver form factor	XFP
Transmission speed	10GE
Center wavelength (nm)	1531.12
Standards compliance	10G-DWDM
Connector type	LC
Applicable cable and maximum transmission distance	Single-mode fiber: 80 km
Transmit power (dBm)	-1 to +3
Maximum receiver sensitivity (dBm)	-24
Overload power (dBm)	-9
Extinction ratio (dB)	8.2

 Copyright © Huawei Technologies Co., Ltd.

Item	Description
Operating temperature	0°C to 70°C (32°F to 158°F)
Part number	02310LPU

3.12.10 DWDM-XFP10G-1531-90

Table 3-92 Technical specifications

Item	Description
Transceiver form factor	XFP
Transmission speed	10GE
Center wavelength (nm)	1531.90
Standards compliance	10G-DWDM
Connector type	LC
Applicable cable and maximum transmission distance	Single-mode fiber: 80 km
Transmit power (dBm)	-1 to +3
Maximum receiver sensitivity (dBm)	-24
Overload power (dBm)	-9
Extinction ratio (dB)	8.2
Operating temperature	0°C to 70°C (32°F to 158°F)
Part number	02310LPS

3.12.11 DWDM-XFP10G-1550-12

Table 3-93 Technical specifications

Item	Description
Transceiver form factor	XFP
Transmission speed	10GE

Copyright © Huawei Technologies Co., Ltd.

Item	Description
Center wavelength (nm)	1550.12
Standards compliance	10G-DWDM
Connector type	LC
Applicable cable and maximum transmission distance	Single-mode fiber: 80 km
Transmit power (dBm)	-1 to +3
Maximum receiver sensitivity (dBm)	-24
Overload power (dBm)	-9
Extinction ratio (dB)	8.2
Operating temperature	0°C to 70°C (32°F to 158°F)
Part number	02310LPQ

3.12.12 DWDM-XFP10G-1550-92

Table 3-94 Technical specifications

Item	Description
Transceiver form factor	XFP
Transmission speed	10GE
Center wavelength (nm)	1550.92
Standards compliance	10G-DWDM
Connector type	LC
Applicable cable and maximum transmission distance	Single-mode fiber: 80 km
Transmit power (dBm)	-1 to +3
Maximum receiver sensitivity (dBm)	-24
Overload power (dBm)	-9
Extinction ratio (dB)	8.2

 Copyright © Huawei Technologies Co., Ltd.

Item	Description
Operating temperature	0°C to 70°C (32°F to 158°F)
Part number	02310LPP

3.12.13 DWDM-XFP10G-1532-68

Table 3-95 Technical specifications

Item	Description
Transceiver form factor	XFP
Transmission speed	10GE
Center wavelength (nm)	1532.68
Standards compliance	10G-DWDM
Connector type	LC
Applicable cable and maximum transmission distance	Single-mode fiber: 80 km
Transmit power (dBm)	-1 to +3
Maximum receiver sensitivity (dBm)	-24
Overload power (dBm)	-9
Extinction ratio (dB)	8.2
Operating temperature	0°C to 70°C (32°F to 158°F)
Part number	02310LQP

3.12.14 DWDM-XFP10G-1551-72

Table 3-96 Technical specifications

Item	Description
Transceiver form factor	XFP
Transmission speed	10GE

Copyright © Huawei Technologies Co., Ltd.

Item	Description
Center wavelength (nm)	1551.72
Standards compliance	10G-DWDM
Connector type	LC
Applicable cable and maximum transmission distance	Single-mode fiber: 80 km
Transmit power (dBm)	-1 to +3
Maximum receiver sensitivity (dBm)	-24
Overload power (dBm)	-9
Extinction ratio (dB)	8.2
Operating temperature	0°C to 70°C (32°F to 158°F)
Part number	02310LQN

3.12.15 DWDM-XFP10G-1529-55

Table 3-97 Technical specifications

Item	Description
Transceiver form factor	XFP
Transmission speed	10GE
Center wavelength (nm)	1529.55
Standards compliance	10G-DWDM
Connector type	LC
Applicable cable and maximum transmission distance	Single-mode fiber: 80 km
Transmit power (dBm)	-1 to +3
Maximum receiver sensitivity (dBm)	-24
Overload power (dBm)	-9
Extinction ratio (dB)	8.2

 Copyright © Huawei Technologies Co., Ltd.

Item	Description
Operating temperature	0°C to 70°C (32°F to 158°F)
Part number	02310LQL

3.12.16 DWDM-XFP10G-1548-51

Table 3-98 Technical specifications

Item	Description
Transceiver form factor	XFP
Transmission speed	10GE
Center wavelength (nm)	1548.51
Standards compliance	10G-DWDM
Connector type	LC
Applicable cable and maximum transmission distance	Single-mode fiber: 80 km
Transmit power (dBm)	-1 to +3
Maximum receiver sensitivity (dBm)	-24
Overload power (dBm)	-9
Extinction ratio (dB)	8.2
Operating temperature	0°C to 70°C (32°F to 158°F)
Part number	02310LQK

3.13 40GE QSFP+ Optical Modules

3.13.1 QSFP-40G-SR4

Copyright © Huawei Technologies Co., Ltd.

Table 3-99 Technical specifications

Item	Description
Transceiver form factor	QSFP+
Transmission speed	40GE
Center wavelength (nm)	850
Standards compliance	40GBASE-SR4
Connector type	MPO/PC (8-strand or 12-strand, type B, female connector)
Applicable cable and maximum transmission distance	• Multimode fiber (OM3): 0.1 km • Multimode fiber (OM4): 0.15 km
Transmit power (dBm)	-7.6 to +2.4
Maximum receiver sensitivity (dBm)	-5.4
Overload power (dBm)	2.4
Extinction ratio (dB)	3.0
Operating temperature	0°C to 70°C (32°F to 158°F)
Part number	02310MHQ

3.13.2 QSFP-40G-iSR4

Table 3-100 Technical specifications

Item	Description
Transceiver form factor	QSFP+
Transmission speed	40GE
Center wavelength (nm)	850
Standards compliance	40GBASE-SR4 40GBASE-iSR4 (non-standard)
Connector type	MPO/PC (8-strand or 12-strand, type B, female connector)
Applicable cable and maximum transmission distance	• Multimode fiber (OM3): 0.1 km • Multimode fiber (OM4): 0.15 km

 Copyright © Huawei Technologies Co., Ltd.

Item	Description
Transmit power (dBm)	-7.6 to +0.5
Maximum receiver sensitivity (dBm)	-9.5
Overload power (dBm)	2.4
Extinction ratio (dB)	3.0
Operating temperature	0°C to 70°C (32°F to 158°F)
Part number	02310MHR

NOTE

This module can connect a 40GE port to four 10GE ports using a 1-to-4 cable.

3.13.3 QSFP-40G-eSR4

Table 3-101 Technical specifications

Item	Description
Transceiver form factor	QSFP+
Transmission speed	40GE
Center wavelength (nm)	850
Standards compliance	40GBASE-eSR4 (non-standard)
Connector type	MPO/PC (8-strand or 12-strand, type B, female connector)
Applicable cable and maximum transmission distance	• Multimode fiber (with modal bandwidth of 160 MHz*km and diameter of 62.5 μm): 0.026 km • Multimode fiber (OM1): 0.033 km • Multimode fiber (with modal bandwidth of 400 MHz*km and diameter of 50 μm): 0.066 km • Multimode fiber (OM2): 0.082 km • Multimode fiber (OM3): 0.3 km • Multimode fiber (OM4): 0.4 km
Transmit power (dBm)	-7.6 to +0.5
Maximum receiver sensitivity (dBm)	-5.4
Overload power (dBm)	2.4

 Copyright © Huawei Technologies Co., Ltd.

Item	Description
Extinction ratio (dB)	3.0
Operating temperature	0°C to 70°C (32°F to 158°F)
Part number	02310RMB

NOTE

This module can connect a 40GE port to four 10GE ports using a 1-to-4 cable.

3.13.4 QSFP-40G-iSM4

Table 3-102 Technical specifications

Item	Description
Transceiver form factor	QSFP+
Transmission speed	40GE
Center wavelength (nm)	1310
Standards compliance	40GBASE-iSM4 (non-standard)
Connector type	MPO/APC (8-strand or 12-strand, type B, female connector)
Applicable cable and maximum transmission distance	Single-mode fiber: 1.4 km
Transmit power (dBm)	-8.2 to +0.5
Maximum receiver sensitivity (dBm)	-11.5
Overload power (dBm)	0.5
Extinction ratio (dB)	3.5
Operating temperature	0°C to 70°C (32°F to 158°F)
Part number	02311DRW

NOTE

This module can connect a 40GE port to four 10GE ports using a 1-to-4 cable.

This module can only be used on a switch running V200R009C00 or a later version. A switch running an earlier version may fail to obtain information about this module.

 Copyright © Huawei Technologies Co., Ltd.

3.13.5 QSFP-40G-eSM4

Table 3-103 Technical specifications

Item	Description
Transceiver form factor	QSFP+
Transmission speed	40GE
Center wavelength (nm)	1310
Standards compliance	40GBASE-eSM4 (non-standard)
Connector type	MPO/APC (8-strand or 12-strand, type B, female connector)
Applicable cable and maximum transmission distance	Single-mode fiber: 10 km
Transmit power (dBm)	-8.2 to +0.5
Maximum receiver sensitivity (dBm)	-12.6
Overload power (dBm)	0.5
Extinction ratio (dB)	3.5
Operating temperature	0°C to 70°C
Part number	02311DTR

NOTE

This module can connect a 40GE port to four 10GE ports using a 1-to-4 cable.

This module can only be used on a switch running V200R010C00 or a later version. A switch running an earlier version may fail to obtain information about this module.

3.13.6 QSFP-40G-LX4

Table 3-104 Technical specifications

Item	Description
Transceiver form factor	QSFP+
Transmission speed	40GE
Center wavelength (nm)	1271, 1291, 1311, 1331

 Copyright © Huawei Technologies Co., Ltd.

Item	Description
Standards compliance	40GBASE-LX4
Connector type	LC
Applicable cable and maximum transmission distance	Single-mode fiber: 2 km Multimode fiber (OM3): 0.15 km
Transmit power (dBm)	-7.0 to +2.3
Maximum receiver sensitivity (dBm)	-11.5
Overload power (dBm)	2.3
Extinction ratio (dB)	3.5
Operating temperature	0°C to 70°C (32°F to 158°F)
Part number	02311HNP

NOTE

When QSFP-40G-LX4 optical modules use multimode fibers, the fibers cannot be connected through multiple optical distribution frames (ODFs).

This module can only be used on a switch running V200R009C00 or a later version. A switch running an earlier version may fail to obtain information about this module.

3.13.7 QSFP-40G-LR4

Table 3-105 Technical specifications

Item	Description
Transceiver form factor	QSFP+
Transmission speed	40GE
Center wavelength (nm)	1271, 1291, 1311, 1331
Standards compliance	40GBASE-LR4
Connector type	LC
Applicable cable and maximum transmission distance	Single-mode fiber: 10 km
Transmit power (dBm)	-7.0 to +2.3

Copyright © Huawei Technologies Co., Ltd.

Item	Description
Maximum receiver sensitivity (dBm)	-11.5
Overload power (dBm)	3.3
Extinction ratio (dB)	3.5
Operating temperature	0°C to 70°C (32°F to 158°F)
Part number	02310MHS

3.13.8 QSFP-40G-ER4

Table 3-106 Technical specifications

Item	Description
Transceiver form factor	QSFP+
Transmission speed	40GE
Center wavelength (nm)	1271, 1291, 1311, 1331
Standards compliance	40GBASE-ER4
Connector type	LC
Applicable cable and maximum transmission distance	Single-mode fiber: 40 km
Transmit power (dBm)	-2.7 to +4.5
Maximum receiver sensitivity (dBm)	-19.5
Overload power (dBm)	-4.5
Extinction ratio (dB)	5.5
Operating temperature	0°C to 70°C (32°F to 158°F)
Part number	02311BKT

NOTE

This module can only be used on a switch running V200R008C00 or a later version. A switch running an earlier version may fail to obtain information about this module.

 Copyright © Huawei Technologies Co., Ltd.

3.13.9 QSFP-40G-SR-BD

Table 3-107 Technical specifications

Item	Description
Transceiver form factor	QSFP+
Transmission speed	40GE
Center wavelength (nm)	850, 900
Standards compliance	40GBASE-BIDI (non-standard)
Connector type	LC
Applicable cable and maximum transmission distance	• Multimode fiber (OM3): 0.1 km • Multimode fiber (OM4): 0.15 km
Transmit power (dBm)	-4 to +5
Maximum receiver sensitivity (dBm)	-4.5
Overload power (dBm)	5
Extinction ratio (dB)	4.5
Operating temperature	10°C to 70°C (50°F to 158°F) **NOTICE** Temporary interruption or packet loss may occur on ports of the switch if the operating temperature is below 10°C (50°F).
Part number	02311FPA

NOTE

QSFP-40G-SR-BD optical modules cannot be used for CSS or stack connection and do not support some digital diagnostic monitoring (DDM) function.

This module can only be used on a switch running V200R009C00 or a later version. A switch running an earlier version may fail to obtain information about this module.

3.13.10 QSFP-40G-SDLC-PAM

Table 3-108 Technical specifications

Item	Description
Transceiver form factor	QSFP+
Transmission speed	40GE

 Copyright © Huawei Technologies Co., Ltd.

Item	Description
Center wavelength (nm)	850
Standards compliance	40GBASE-PAM4 (non-standard)
Connector type	LC
Applicable cable and maximum transmission distance	• Multimode fiber (OM3): 100 m • Multimode fiber (OM4): 150 m
Transmit power (dBm)	-2.5 to +2.4
Maximum receiver sensitivity (dBm)	-8.0
Overload power (dBm)	2.4
Extinction ratio (dB)	3
Operating temperature	0°C to 70°C (32°F to 158°F)
Part number	02311PUU

NOTE

This module can only be used on a switch running V200R011C10 or a later version.

3.13.11 QSFP-40G-eSDLC-PAM

Table 3-109 Technical specifications

Item	Description
Transceiver form factor	QSFP+
Transmission speed	40GE
Center wavelength (nm)	850
Standards compliance	40GBASE-ePAM4 (non-standard)
Connector type	LC
Applicable cable and maximum transmission distance	• Multimode fiber (OM3): 100 m • Multimode fiber (OM4): 300 m
Transmit power (dBm)	-2 to +2.4
Maximum receiver sensitivity (dBm)	-8.0

 Copyright © Huawei Technologies Co., Ltd.

Item	Description
Overload power (dBm)	2.4
Extinction ratio (dB)	3
Operating temperature	0°C to 70°C (32°F to 158°F)
Part number	02311QTR

NOTE

This module can only be used on a switch running V200R011C10 or a later version.

3.14 40GE CFP Optical Modules

3.14.1 CFP-40G-SR4

Table 3-110 Technical specifications

Item	Description
Transceiver form factor	CFP
Transmission speed	40GE
Center wavelength (nm)	850
Standards compliance	40GBASE-SR4
Connector type	MPO/PC (8-strand or 12-strand, type B, female connector)
Applicable cable and maximum transmission distance	• Multimode fiber (OM3): 0.1 km • Multimode fiber (OM4): 0.15 km
Transmit power (dBm)	-7.6 to +2.4
Maximum receiver sensitivity (dBm)	-9.5
Overload power (dBm)	2.4
Extinction ratio (dB)	3
Operating temperature	0°C to 70°C (32°F to 158°F)
Part number	02311CXC

 Copyright © Huawei Technologies Co., Ltd.

NOTE

This module can connect a 40GE port to four 10GE ports using a 1-to-4 cable.

3.14.2 CFP-40G-LR4

Table 3-111 Technical specifications

Item	Description
Transceiver form factor	CFP
Transmission speed	40GE
Center wavelength (nm)	1271, 1291, 1311, 1331
Standards compliance	40GBASE-LR4
Connector type	LC
Applicable cable and maximum transmission distance	Single-mode fiber: 10 km
Transmit power (dBm)	-4 to +3.5
Maximum receiver sensitivity (dBm)	-11.5
Overload power (dBm)	3.5
Extinction ratio (dB)	3.5
Operating temperature	0°C to 70°C (32°F to 158°F)
Part number	02310YTF

3.14.3 CFP-40G-ER4

Table 3-112 Technical specifications

Item	Description
Transceiver form factor	CFP
Transmission speed	40GE
Center wavelength (nm)	1271, 1291, 1311, 1331
Standards compliance	40GBASE-ER4
Connector type	LC

 Copyright © Huawei Technologies Co., Ltd.

Item	Description
Applicable cable and maximum transmission distance	Single-mode fiber: 40 km
Transmit power (dBm)	-1.1 to +3.8
Maximum receiver sensitivity (dBm)	-18
Overload power (dBm)	3.8
Extinction ratio (dB)	7
Operating temperature	0°C to 70°C (32°F to 158°F)
Part number	02310YTH

3.14.4 CFP-40G-ZR4

Table 3-113 Technical specifications

Item	Description
Transceiver form factor	CFP
Transmission speed	40GE
Center wavelength (nm)	1531.12, 1537.4, 1543.73, 1550.12
Standards compliance	40GBASE-ZR4
Connector type	LC
Applicable cable and maximum transmission distance	Single-mode fiber: 80 km
Transmit power (dBm)	0 to +4.5
Maximum receiver sensitivity (dBm)	-22
Overload power (dBm)	-7
Extinction ratio (dB)	9
Operating temperature	0°C to 70°C (32°F to 158°F)
Part number	02311KAH

Copyright © Huawei Technologies Co., Ltd.

NOTE

This module can only be used on a switch running V200R009C00 or a later version. A switch running an earlier version may fail to obtain information about this module.

3.15 100GE CFP Optical Modules

3.15.1 CFP-100G-SR10

Table 3-114 Technical specifications

Item	Description
Transceiver form factor	CFP
Transmission speed	100GE
Center wavelength (nm)	850
Standards compliance	100GBASE-SR10
Connector type	MPO/PC (24-strand, type B, female connector)
Applicable cable and maximum transmission distance	• Multimode fiber (OM2): 0.03 km • Multimode fiber (OM3): 0.1 km • Multimode fiber (OM4): 0.15 km
Transmit power (dBm)	-7.6 to +2.4
Maximum receiver sensitivity (dBm)	-5.4
Overload power (dBm)	2.4
Extinction ratio (dB)	3
Operating temperature	0°C to 70°C (32°F to 158°F)
Part number	02310YTB

NOTE

This module can connect a 100GE port to two 40GE ports using a 1-to-2 cable or to ten 10GE ports using a 1-to-10 cable.

3.15.2 CFP-100G-LR4

 Copyright © Huawei Technologies Co., Ltd.

Table 3-115 Technical specifications

Item	Description
Transceiver form factor	CFP
Transmission speed	100GE
Center wavelength (nm)	1295, 1300, 1304, 1309
Standards compliance	100GBASE-LR4
Connector type	LC
Applicable cable and maximum transmission distance	Single-mode fiber: 10 km
Transmit power (dBm)	-4.3 to +4.5
Maximum receiver sensitivity (dBm)	-8.6
Overload power (dBm)	4.5
Extinction ratio (dB)	4
Operating temperature	0°C to 70°C (32°F to 158°F)
Part number	02310YTD

3.15.3 CFP-100G-ER4

Table 3-116 Technical specifications

Item	Description
Transceiver form factor	CFP
Transmission speed	100GE
Center wavelength (nm)	1295, 1300, 1304, 1309
Standards compliance	100GBASE-ER4
Connector type	LC
Applicable cable and maximum transmission distance	Single-mode fiber: 40 km
Transmit power (dBm)	-2.9 to +2.9

Copyright © Huawei Technologies Co., Ltd.

Item	Description
Maximum receiver sensitivity (dBm)	-21.4
Overload power (dBm)	4.5
Extinction ratio (dB)	8
Operating temperature	0°C to 70°C (32°F to 158°F)
Part number	02310YTE

NOTE

CFP-100G-ER4 optical modules are used in the following scenarios:

- When the transmission distance is less than 10 km, the optical power on the receive end is higher than 1 dBm. In this case, use a 10 dB optical attenuator to reduce the receive optical power.
- When the transmission distance is longer than or equal to 10 km and less than 25 km, the optical power on the receive end is higher than -4 dBm and lower than or equal to 1 dBm. In this case, use a 5 dB optical attenuator to reduce the receive optical power.
- When the transmission distance is in the range of 25 km and 40 km, the optical power on the receive end is lower than or equal to -4 dBm. In this case, no optical attenuator is required.

3.16 100GE QSFP28 Optical Modules

3.16.1 QSFP28-100G-LR4

Table 3-117 Technical specifications

Item	Description
Transceiver form factor	QSFP28
Transmission speed	100GE
Center wavelength (nm)	1295, 1300, 1304, 1309
Standards compliance	100GBASE-LR4
Connector type	LC
Applicable cable and maximum transmission distance	Single-mode fiber (G.652): 10 km
Transmit power (dBm)	-4.3 to +4.5

 Copyright © Huawei Technologies Co., Ltd.

Item	Description
Maximum receiver sensitivity (dBm)	-8.6
Overload power (dBm)	4.5
Extinction ratio (dB)	4
Operating temperature	0°C to 70°C (32°F to 158°F)
Part number	02311KNU

3.16.2 QSFP28-100G-10KM

Table 3-118 Technical specifications

Item	Description
Transceiver form factor	QSFP28
Transmission speed	100GE
Center wavelength (nm)	1295, 1300, 1304, 1309
Standards compliance	100GBASE-LR4
Connector type	LC
Applicable cable and maximum transmission distance	Single-mode fiber (G.652): 10 km
Transmit power (dBm)	-4.3 to +4.5
Maximum receiver sensitivity (dBm)	-8.6
Overload power (dBm)	4.5
Extinction ratio (dB)	4
Operating temperature	0°C to 70°C (32°F to 158°F)
Part number	02311SYT

3.16.3 QSFP28-100G-PSM4

Copyright © Huawei Technologies Co., Ltd.

Table 3-119 Technical specifications

Item	Description
Transceiver form factor	QSFP28
Transmission speed	100GE
Center wavelength (nm)	1310
Standards compliance	100GBASE-PSM4 (non-standard)
Connector type	MPO/APC (8-strand or 12-strand, type B, female connector)
Applicable cable and maximum transmission distance	Single-mode fiber (G.652): 500 m
Transmit power (dBm)	-9.4 to +2
Maximum receiver sensitivity (dBm)	-11.35
Overload power (dBm)	2.2
Extinction ratio (dB)	3.5
Operating temperature	0°C to 70°C (32°F to 158°F)
Part number	02311MNM

3.16.4 QSFP28-100G-SR4

Table 3-120 Technical specifications

Item	Description
Transceiver form factor	QSFP28
Transmission speed	100GE
Center wavelength (nm)	850
Standards compliance	100GBASE-SR4
Connector type	MPO/PC (8-strand or 12-strand, type B, female connector)
Applicable cable and maximum transmission distance	• Multimode fiber (OM3): 70 m • Multimode fiber (OM4): 100 m

 Copyright © Huawei Technologies Co., Ltd.

Item	Description
Transmit power (dBm)	-8.4 to +2.4
Maximum receiver sensitivity (dBm)	-10.3
Overload power (dBm)	2.4
Extinction ratio (dB)	2
Operating temperature	0°C to 70°C (32°F to 158°F)
Part number	02311GBW

3.16.5 QSFP-100G-eSR4

Table 3-121 Technical specifications

Item	Description
Transceiver form factor	QSFP28
Transmission speed	100GE
Center wavelength (nm)	850
Standards compliance	100GBase-eSR4 (non-standard)
Connector type	MPO/PC (8-strand or 12-strand, type B, female connector)
Applicable cable and maximum transmission distance	• Multimode fiber (OM3): 200 m • Multimode fiber (OM4): 300 m
Transmit power (dBm)	-8.4 to +2.4
Maximum receiver sensitivity (dBm)	-9.2
Overload power (dBm)	2.4
Extinction ratio (dB)	≥ 2
Operating temperature	0°C to 70°C (32°F to 158°F)
Part number	02311PSH

NOTE

This module can only be used on a switch running V200R011C10 or a later version. A switch running an earlier version may fail to obtain information about this module.

 Copyright © Huawei Technologies Co., Ltd.

3.16.6 QSFP-100G-CLR4

Table 3-122 Technical specifications

Item	Description
Transceiver form factor	QSFP28
Transmission speed	100GE
Center wavelength (nm)	1271, 1291, 1311, 1331
Standards compliance	100GBASE-CLR4 (non-standard)
Connector type	LC
Applicable cable and maximum transmission distance	Single-mode fiber (G.652): 2 km
Transmit power (dBm)	-6.5 to +2.5
Maximum receiver sensitivity (dBm)	-10.7
Overload power (dBm)	2.5
Extinction ratio (dB)	3.5
Operating temperature	0°C to 70°C (32°F to 158°F)
Part number	02311MNP

3.16.7 QSFP-100G-CWDM4

Table 3-123 Technical specifications

Item	Description
Transceiver form factor	QSFP28
Transmission speed	100GE
Center wavelength (nm)	1271, 1291, 1311, 1331
Standards compliance	100GBASE-CWDM4 (non-standard)
Connector type	LC
Applicable cable and maximum transmission distance	Single-mode fiber (G.652): 2 km

Copyright © Huawei Technologies Co., Ltd.

Item	Description
Transmit power (dBm)	-6.5 to +2.5
Maximum receiver sensitivity (dBm)	-9.8
Overload power (dBm)	2.5
Extinction ratio (dB)	3.5
Operating temperature	0°C to 70°C (32°F to 158°F)
Part number	02311MNN

3.16.8 QSFP-100G-ER4-Lite

Table 3-124 Technical specifications

Item	Description
Transceiver form factor	QSFP28
Transmission speed	100GE
Center wavelength (nm)	1295, 1300, 1304, 1309
Standards compliance	Non-standard and compatible with the 100GBASE-ER4
Connector type	LC
Applicable cable and maximum transmission distance	Single-mode fiber (G.652): ● Disables the RS-FEC function: 30 km ● Enables the RS-FEC function: 40 km
Transmit power (dBm)	-2.5 to +2.9
Maximum receiver sensitivity (dBm)	-18.4
Overload power (dBm)	-3.5
Extinction ratio (dB)	8
Operating temperature	0°C to 70°C (32°F to 158°F)
Part number	02311YXR

NOTE

This module can only be used on a switch running V200R012C00 or a later version.

The RS-FEC function can be enabled on this module in V200R019C00 or a later version.

 Copyright © Huawei Technologies Co., Ltd.

3.17 GPON Optical Modules

3.17.1 H87MMA5671A2

Table 3-125 Technical specifications

Item	Description
Transceiver form factor	eSFP
Transmission speed (Gbit/s)	Rx: 2.488/Tx: 1.244 **NOTE** In practice, the maximum upstream service bandwidth is 1.1 Gbit/s and downlink service bandwidth is 2.3 Gbit/s.
Center wavelength (nm)	Rx: 1490/Tx: 1310
Standards compliance	GPON CLASS B+
Connector type	SC
Applicable cable and maximum transmission distance	Single-mode fiber: 20 km
Transmit power (dBm)	0.5 to 5.0
Maximum receiver sensitivity (dBm)	-27
Overload power (dBm)	-8.0
Extinction ratio (dB)	10
Operating temperature	-40°C to +85°C (-40°F to +185°F)
Part number	03031QHU

NOTE

Ensure that the optical power is not overloaded. Otherwise, the optical module may be burnt.

This module can only be used on a switch running V200R012C00 or a later version.

3.18 Industrial Optical Modules

Copyright © Huawei Technologies Co., Ltd.

3.18.1 OGSM01880

Table 3-126 Technical specifications

Item	Description
Transceiver form factor	eSFP
Transmission speed	GE
Center wavelength (nm)	850
Standards compliance	1000BASE-SX
Connector type	LC
Applicable cable and maximum transmission distance	• Multimode fiber (with modal bandwidth of 160 MHz*km and diameter of 62.5 μm): 0.22 km • Multimode fiber (OM1): 0.275 km • Multimode fiber (with modal bandwidth of 400 MHz*km and diameter of 50 μm): 0.5 km • Multimode fiber (OM2): 0.55 km
Transmit power (dBm)	-10 to -2.5
Maximum receiver sensitivity (dBm)	-17.0
Overload power (dBm)	0
Extinction ratio (dB)	9
Operating temperature	-40°C to +85°C (-40°F to +185°F)
Part number	02310LJG

3.18.2 OGSC10DD0

Table 3-127 Technical specifications

Item	Description
Transceiver form factor	eSFP
Transmission speed	GE
Center wavelength (nm)	1310
Standards compliance	1000BASE-LX10/LH

Copyright © Huawei Technologies Co., Ltd.

Item	Description
Connector type	LC
Applicable cable and maximum transmission distance	Single-mode fiber: 10 km
Transmit power (dBm)	-9.0 to -3.0
Maximum receiver sensitivity (dBm)	-19
Overload power (dBm)	-3.0
Extinction ratio (dB)	9
Operating temperature	-40°C to +85°C (-40°F to +185°F)
Part number	02310LJH

3.18.3 OGSC40DD0

Table 3-128 Technical specifications

Item	Description
Transceiver type	eSFP
Transmission speed	GE
Center wavelength (nm)	1310
Standards compliance	Non-standard
Connector type	LC
Applicable cable and maximum transmission distance	Single-mode fiber: 40 km
Transmit power (dBm)	-5.0 to 0
Maximum receiver sensitivity (dBm)	-22.5
Overload power (dBm)	-3.0
Extinction ratio (dB)	9
Operating temperature	-40°C to +85°C (-40°F to +185°F)
Part number	02310LJJ

 Copyright © Huawei Technologies Co., Ltd.

3.18.4 SFP+10GE-LH10-SM1310

Table 3-129 Technical Specifications

Item	Description
Transceiver form factor	SFP+
Transmission speed	10GE
Center wavelength (nm)	1310
Standards compliance	10GBASE-LR
Connector type	LC
Applicable cable and maximum transmission distance	Single-mode fiber: 10 km
Transmit power (dBm)	-8.2 to +0.5
Maximum receiver sensitivity (dBm)	-14.4
Overload power (dBm)	0.5
Extinction ratio (dB)	3.5
Operating temperature	-40°C to +85°C (-40°F to +185°F)
Part number	02311MUU

3.18.5 SFP-10G-SR

Table 3-130 Technical Specifications

Item	Description
Transceiver form factor	SFP+
Transmission speed	10GE
Center wavelength (nm)	850
Standards compliance	10GBASE-SR
Connector type	LC
Applicable cable and maximum transmission distance	Multimode fiber (OM3): 0.3 km

Copyright © Huawei Technologies Co., Ltd.

Item	Description
Transmit power (dBm)	-7.3 to -1.0
Maximum receiver sensitivity (dBm)	-11.1
Overload power (dBm)	-1.0
Extinction ratio (dB)	3.0
Operating temperature	0°C to 85°C (32°F to 185°F)
Part number	02311SKW

3.18.6 SFP-10G-iLR

Table 3-131 Technical specifications

Item	Description
Transceiver form factor	SFP+
Transmission speed	10GE
Center wavelength (nm)	1310
Standards compliance	10GBASE-iLR (non-standard)
Connector type	LC
Applicable cable and maximum transmission distance	Single-mode fiber: 1.4 km
Transmit power (dBm)	-8.2 to +0.5
Maximum receiver sensitivity (dBm)	-14.4
Overload power (dBm)	0.5
Extinction ratio (dB)	3.5
Operating temperature	-40°C to +85°C (-40°F to +185°F)
Part number	02311BJJ

NOTE

This module can only be used on a switch running V200R008C00 or a later version. A switch running an earlier version may fail to obtain information about this module.

 Copyright © Huawei Technologies Co., Ltd.

3.18.7 SFP-10G-BXU1 (Single-Fiber-Bidirectional Module)

Table 3-132 Technical specifications

Item	Description
Transceiver form factor	SFP+
Transmission speed	10GE
Center wavelength (nm)	Rx: 1330/Tx: 1270
Standards compliance	10GBASE-BX
Connector type	LC
Applicable cable and maximum transmission distance	Single-mode fiber: 10 km
Transmit power (dBm)	-8.2 to +0.5
Maximum receiver sensitivity (dBm)	-14.4
Overload power (dBm)	0.5
Extinction ratio (dB)	3.5
Operating temperature	-40°C to +85°C (-40°F to +185°F)
Part number	02310QBJ

NOTE

Single-fiber bidirectional (BIDI) optical modules must be used in pairs. For example, SFP-10G-BXU1 must be used with SFP-10G-BXD1.

3.18.8 SFP-10G-BXD1 (Single-Fiber-Bidirectional Module)

Table 3-133 Technical specifications

Item	Description
Transceiver form factor	SFP+
Transmission speed	10GE
Center wavelength (nm)	Rx: 1270/Tx: 1330
Standards compliance	10GBASE-BX

Copyright © Huawei Technologies Co., Ltd.

Item	Description
Connector type	LC
Applicable cable and maximum transmission distance	Single-mode fiber: 10 km
Transmit power (dBm)	-8.2 to +0.5
Maximum receiver sensitivity (dBm)	-14.4
Overload power (dBm)	0.5
Extinction ratio (dB)	3.5
Operating temperature	-40°C to +85°C (-40°F to +185°F)
Part number	02310QDT

NOTE

Single-fiber bidirectional (BIDI) optical modules must be used in pairs. For example, SFP-10G-BXD1 must be used with SFP-10G-BXU1.

3.18.9 SFP-GE-BX-D1-I (Single-Fiber-Bidirectional Module)

Table 3-134 Technical specifications

Item	Description
Transceiver form factor	SFP
Transmission speed	GE
Center wavelength (nm)	Rx: 1310/Tx: 1490
Standards compliance	1000BASE-BX
Connector type	LC
Applicable cable and maximum transmission distance	Single-mode fiber: 10 km
Transmit power (dBm)	-9 to -3
Maximum receiver sensitivity (dBm)	-19.5
Overload power (dBm)	-3
Extinction ratio (dB)	9

 Copyright © Huawei Technologies Co., Ltd.

Item	Description
Operating temperature	-40°C to +85°C (-40°F to +185°F)
Part number	02311DMA

NOTE

This module can only be used on a switch running V200R012C00 or a later version.

Single-fiber bidirectional (BIDI) optical modules must be used in pairs. For example, SFP-GE-BX-D1-I must be used with SFP-GE-BX-U1-I.

3.18.10 SFP-GE-BX-U1-I (Single-Fiber-Bidirectional Module)

Table 3-135 Technical specifications

Item	Description
Transceiver form factor	SFP
Transmission speed	GE
Center wavelength (nm)	Rx: 1490/Tx: 1310
Standards compliance	1000BASE-BX
Connector type	LC
Applicable cable and maximum transmission distance	Single-mode fiber: 10 km
Transmit power (dBm)	-9 to -3
Maximum receiver sensitivity (dBm)	-19.5
Overload power (dBm)	-3
Extinction ratio (dB)	9
Operating temperature	-40°C to +85°C (-40°F to +185°F)
Part number	02311DMF

NOTE

This module can only be used on a switch running V200R012C00 or a later version.

Single-fiber bidirectional (BIDI) optical modules must be used in pairs. For example, SFP-GE-BX-D1-I must be used with SFP-GE-BX-U1-I.

 Copyright © Huawei Technologies Co., Ltd.

4 FAQs About Optical Modules

4.1 How Do I Query the Optical Modules Supported by Switches?

4.2 Huawei Switches Must Use Huawei-certified Optical Modules

4.3 Are Optical Modules of Huawei Switches Interchangeable with Optical Modules of Other Manufacturers?

4.4 What Are the Differences Between a 10GBASE-LRM Optical Module and Other Optical Modules? Can They Interoperate?

4.5 How Do I Choose Single-mode and Multi-mode Optical Modules?

4.6 Are Attenuators Required in the Case of Short-Distance Connection Using Single-Mode Optical Modules?

4.7 Select Appropriate Optical Fibers to Connect 10GE Multimode Optical Modules on Two Switches

4.8 Why an Interface Does Not Enter the linkdown State When Its Receiving Power Reaches the Lower Threshold?

4.9 Does a Port Frequently Alternate Between Up and Down States When a Non-Huawei-Certified Optical Module Is Used?

4.10 How Can I Determine Whether an Optical Module Is Identified by the Switch or Check the Transmit Power of an Optical Module?

4.11 Can an XFP Optical Module Interconnect with an SFP+ Optical Module?

4.12 What Is a Single-Fiber Bidirectional Optical Module?

4.13 Can a Multi-mode Optical Module Use a Single-Mode Optical Fiber? Can a Single-Mode Optical Module Use a Multi-mode Optical Fiber?

4.14 Why Does a Multi-mode Optical Module Have Multiple Transmission Distances?

4.15 Will an Optical Module Be Damaged If the Receive Power Is High?

 Copyright © Huawei Technologies Co., Ltd.

4.1 How Do I Query the Optical Modules Supported by Switches?

- For details about the optical modules supported by optical ports on switches, see "Appearance and Structure" of a specific switch model in the *Hardware Description*. The following figure shows the optical modules supported by the S5720-12TP-LI-AC.

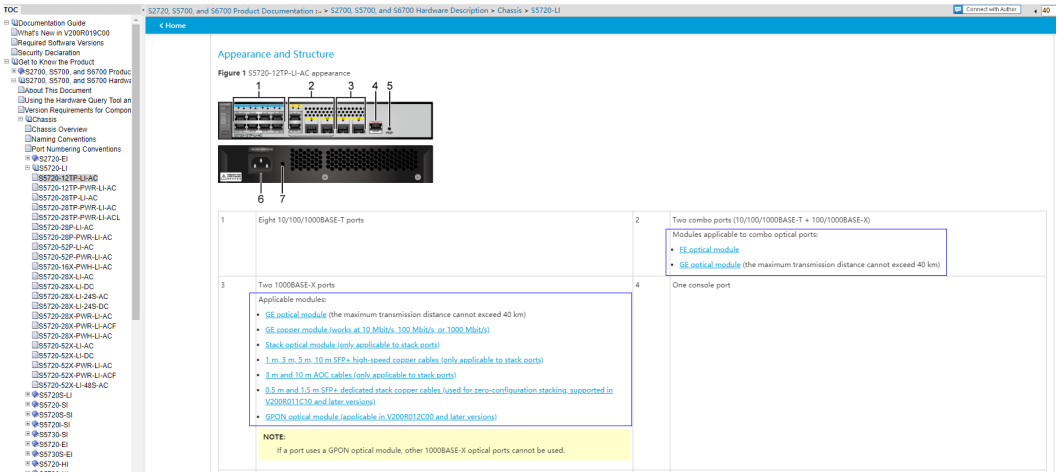

- You can also use the **hardware query tool** to query the components including optical modules supported by different switch models and the detailed specifications by part number, product model, and module type.

4.2 Huawei Switches Must Use Huawei-certified Optical Modules

Description: Huawei switches must use Huawei-certified optical modules. Non-Huawei-certified optical modules cannot ensure transmission reliability and may affect service stability. Huawei is not responsible for any problem caused by the use of non-Huawei-certified optical modules and will not fix such problems.

Reason: Optical modules from various vendors differ in implementations or specifications. Non-Huawei-certified optical modules are not verified through interoperability tests with Huawei switches and may cause unexpected problems when they are used on Huawei switches. Huawei certification is a measure to guarantee reliability and quality of optical modules.

Identification method: For details, see "Import Notes About Using Optical Modules Certified for Huawei Switches" under Hardware Description > Pluggable Modules for Interfaces in product documentation.

4.3 Are Optical Modules of Huawei Switches Interchangeable with Optical Modules of Other Manufacturers?

No. Huawei switches must use Huawei-certified switch optical modules.

4.4 What Are the Differences Between a 10GBASE-LRM Optical Module and Other Optical Modules? Can They Interoperate?

Compared with other optical modules, 10GBASE-LRM optical modules have lower cost, lower power, smaller size and provide universal multimode ports. The maximum transmission distance of a 10GBASE-LRM optical module is up to 220 m. A 10GBASE-LRM optical module cannot interoperate with other types of optical modules.

4.5 How Do I Choose Single-mode and Multi-mode Optical Modules?

Multi-mode optical modules are applicable to short-distance transmission, while single-mode optical modules are applicable to long-distance transmission. Single-mode optical modules will be widely used in future.

NOTE

Some single-mode optical modules need optical attenuators, but some do not need. This depends on the transmit/receive power of the optical module and the transmission distance.

Multiple types of Huawei devices can use the same type of optical module. For details, see the product hardware description.

4.6 Are Attenuators Required in the Case of Short-Distance Connection Using Single-Mode Optical Modules?

Whether attenuators are required depends on the transmit power at the Tx end and the receive power range allowed at the Rx end. If the transmit power at the Tx end is beyond the receive power range allowed at the Rx end, attenuators are required. The path loss is small in short-distance transmission. If optical modules with a long transmission distance (generally more than 40 km) are used for short-distance connection, it is recommended that you use attenuators to reduce the receive power at the Rx end.

 Copyright © Huawei Technologies Co., Ltd.

4.7 Select Appropriate Optical Fibers to Connect 10GE Multimode Optical Modules on Two Switches

Description: When two interfaces need to communicate using 10GE multimode optical modules, select optical fibers based on the transmission distance required on your network. For example, an OMXD30000 multimode optical module supports a maximum transmission distance of 400 m, but the actual transmission distance varies depending on the optical fibers used. **Table 4-1** lists the maximum transmission distances of a 10GE multimode optical module when working with different optical fibers.

Table 4-1 Maximum transmission distances of a 10GE multimode optical module when working with different optical fibers

Optical Fiber Type	Maximum Transmission Distance
OM1	33 m
OM2	82 m
OM3	300 m
OM4	400m

Reason: The transmission distance of an optical module depends on specifications of the optical fibers used.

Identification method: Look up the model of the optical module in the *Hardware Description* to check the maximum transmission distance based on the type of optical fibers used.

Suggestion: Select optical fibers based on the actual transmission distance.

Involved version: all versions

4.8 Why an Interface Does Not Enter the linkdown State When Its Receiving Power Reaches the Lower Threshold?

An enhanced optical module has two thresholds for optical power: a warning threshold and an alarm threshold.

- When the receiving power of an interface falls below the lower warning threshold, packets may be lost on the interface, but the interface does not enter the linkdown state.
- When the receiving power of an interface reaches the lower alarm threshold, severe packet loss may occur, or even the interface enters the linkdown state. A high receiving power may corrupt an optical module.

4.9 Does a Port Frequently Alternate Between Up and Down States When a Non-Huawei-Certified Optical Module Is Used?

If a non-Huawei-certified optical module is used, an exception may occur on the port. If the following alarms are generated, you are advised to replace the optical module with a Huawei-certified optical module.

```
Jan 17 2018 10:33:54.0+01:00 %%01DEVM/1/hwOpticalUnAuthorized(t):CID=0x80fc0488-
OID=1.3.6.1.4.1.2011.5.25.219.2.4.9;The optical module was not certified by Huawei Ethernet Switch.
(EntPhysicalIndex=17305868, EntPhysicalName=GE1/0/26, EntityTrapFaultID=145920, Reason=It has been
observed that a transceiver has been installed that is not certified by Huawei Ethernet Switch. Huawei
cannot ensure that it is completely adaptive and will not cause any adverse effects.If it is continued to be
used, Huawei is not obligated to provide support to remedy defects or faults arising out of or resulting from
installing and using of the non-certified transceiver.)
Jan 17 2018 12:00:12+01:00 VP-STE-D01 %%01IFPDT/4/IF_STATE(l)[0]:Interface GigabitEthernet1/0/26 has
turned into UP state.
Jan 17 2018 12:00:07+01:00 VP-STE-D01 %%01IFPDT/4/IF_STATE(l)[1]:Interface GigabitEthernet1/0/26 has
turned into DOWN state.
Jan 17 2018 11:59:30+01:00 VP-STE-D01 %%01IFPDT/4/IF_STATE(l)[2]:Interface GigabitEthernet1/0/26 has
turned into UP state.
Jan 17 2018 11:59:25+01:00 VP-STE-D01 %%01IFPDT/4/IF_STATE(l)[3]:Interface GigabitEthernet1/0/26 has
turned into DOWN state.
Jan 17 2018 11:59:12+01:00 VP-STE-D01 %%01IFPDT/4/IF_STATE(l)[4]:Interface GigabitEthernet1/0/26 has
turned into UP state.
```

4.10 How Can I Determine Whether an Optical Module Is Identified by the Switch or Check the Transmit Power of an Optical Module?

Run the **display transceiver** command on a switch. If the following information is displayed, the optical module can be identified by the switch. This command can also display the type, wavelength, transmission distance, and power of the optical module.

NOTICE

The switch must have optical modules certified for Huawei switches installed. Optical modules that are not certified for Huawei switches cannot ensure transmission reliability and may affect service stability on the switch. Huawei is not responsible for any problem caused by optical modules that are not certified for Huawei switches and will not fix such problems.

```
<HUAWEI> display transceiver interface gigabitethernet 3/0/0 verbose
GigabitEthernet3/0/0 transceiver information:
-------------------------------------------------------------
Common information:
Transceiver Type              :1000_BASE_SX_SFP            //Optical module type
  Connector Type              :LC
  Wavelength(nm)              :850
  Transfer Distance(m)        :500(50um),300(62.5um)
  Digital Diagnostic Monitoring  :YES
```

```
  Vendor Name                    :FINISAR CORP.
  Vendor Part Number             :FTLF8519P2BNL-HW
  Ordering Name                  :
-------------------------------------------------------------
Manufacture information:
  Manu. Serial Number            :PEP3L5D
  Manufacturing Date             :2008-12-05
  Vendor Name                    :FINISAR CORP.
-------------------------------------------------------------
Alarm information:
RX loss of signal                          //Loss of receiving signals
RX power low                                //Low receive power
-------------------------------------------------------------
Diagnostic information:
  Temperature(°C)                :32
  Voltage(V)                     :3.31
  Bias Current(mA)               :0.00
  Bias High Threshold(mA)        :33.54
  Bias Low  Threshold(mA)        :1.69
  Current Rx Power(dBM)          :-6.49
  Default Rx Power High Threshold(dBM)  :0.00
  Default Rx Power Low  Threshold(dBM)  :-16.99
  Current Tx Power(dBM)          :-50.00
  Default Tx Power High Threshold(dBM)  :0.00
  Default Tx Power Low  Threshold(dBM)  :-12.50
  User Set Rx Power High Threshold(dBM) :0.00
  User Set Rx Power Low Threshold(dBM)  :-16.99
  User Set Tx Power High Threshold(dBM) :0.00
  User Set Tx Power Low Threshold(dBM)  :-12.50
-------------------------------------------------------------
```

4.11 Can an XFP Optical Module Interconnect with an SFP+ Optical Module?

An SFP+ optical module can interconnect with an XFP optical module. Two optical modules can interconnect with each other as long as their wavelengths, transmit power, and receive power meet interconnection requirements, regardless of their form factors.

4.12 What Is a Single-Fiber Bidirectional Optical Module?

A single-fiber bidirectional optical module uses one optical fiber to transmit and receive signals, and the transmit and receive wavelengths must match.

4.13 Can a Multi-mode Optical Module Use a Single-Mode Optical Fiber? Can a Single-Mode Optical Module Use a Multi-mode Optical Fiber?

A multi-mode optical module cannot use a single-mode optical fiber. This is because a single-mode optical fiber is thin and may cause exceptions such as low optical power when it is used by a multi-mode optical module. A single-mode optical module can use a multi-mode optical fiber at a short distance, which is not recommended.

4.14 Why Does a Multi-mode Optical Module Have Multiple Transmission Distances?

In the **display transceiver** command output, multiple transmission distances are displayed for a multi-mode optical module, as shown in the following figure.

```
Connector Type                  :LC
Wavelength(nm)                  :850
Transfer Distance(m)            :30(50um),10(62.5um),100(OM3)
Digital Diagnostic Monitoring   :YES
Vendor Name                     :FINISAR CORP.
Vendor Part Number              :FTLX8570D3BCL
Ordering Name                   :
```

The transmission distance supported by a multi-mode optical module varies according to the types of optical fibers used. The transmission distance is longer when OM3 optical fibers are used.

4.15 Will an Optical Module Be Damaged If the Receive Power Is High?

A port may be in Down state if the receive power of the optical module installed in the port is too low. If the receive power is too high, the receive optical bore of the optical module may be damaged. To prevent such damage, reduce the transmit power of the optical module on the remote port or use optical attenuators on the link between the local and remote ends.

 Copyright © Huawei Technologies Co., Ltd.

5 Optical Module Installation and Replacement

5.1 Installing an Optical Module

5.2 Replacing an Optical Module

5.1 Installing an Optical Module

Context

This section describes how to install an optical module. The method used to install a copper transceiver module is the same, except that the copper transceiver module connects to a network cable instead of optical fibers.

DANGER

Never look directly into an optical module or the ends of optical fibers. Optical modules and connected fibers emit laser radiation that can cause eye damage.

NOTICE

- Do not touch the edge connector of an optical module during the installation.
- Install an optical module on a port before connecting optical fibers to the transceiver module.
- Install dust plugs on idle optical ports.

Tools and Accessories

- ESD wrist strap or ESD gloves
- Dust plugs

Procedure

Step 1 Wear an ESD wrist strap or ESD gloves. When wearing an ESD wrist strap, ensure that it is in close contact with your wrist and grounded properly.

Step 2 Remove the dust plug from an optical port. Keep the dust plug for future use.

Step 3 Ensure that the optical module is correctly oriented and gently push it into the optical port until you hear a click.

NOTICE

If the optical module cannot be completely inserted into the optical port, do not force it into the port. Turn the optical module 180 degrees and try again.

Figure 5-1 Installing an optical module

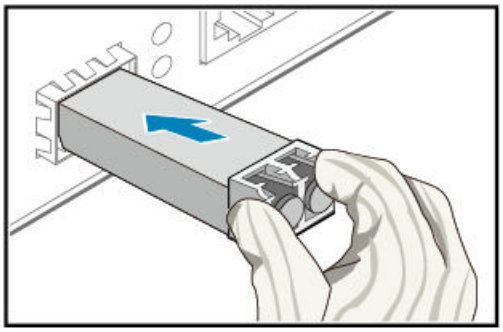

Step 4 Check whether the transceiver module is securely seated. While keeping the handle of the transceiver module closed, grasp the two sides of the transceiver module with your thumb and forefinger and gently pull it.

- If the transceiver module does not pull out, it is installed correctly.
- If the transceiver module pulls out, reinstall it.

NOTE

Ensure that transceiver modules are fitted with dust plugs when not in use and remove the dust plugs only when you are ready to connect optical fibers.

----End

5.2 Replacing an Optical Module

Context

CAUTION

Never look directly into an optical module or the ends of optical fibers. Optical modules and connected fibers emit laser radiation that will cause eye damage.

NOTICE

Use optical modules certified for Huawei switches. Using other optical modules may affect service stability and Huawei can accept no liability for the outcome.

NOTICE

Ensure that the new optical module has the same center wavelength and complies with the same standards as the old one.

NOTICE

Optical modules are electrostatic-sensitive components. Take ESD protection measures when replacing optical modules.

NOTICE

- Unplug the optical fibers from the optical module before removing it. Install or remove optical fibers carefully to avoid damaging the fiber connectors. Applying too much force to the optical fibers may damage the optical module.
- If an optical module cannot be completely inserted into an optical port, turn the optical module over and try again.
- Cover unconnected optical modules with dust plugs.

Tools and Accessories

- ESD wrist strap or ESD gloves
- Dust caps
- Dust plugs
- Alcohol swab

Procedure

Step 1 Wear an ESD wrist strap or ESD gloves. Ensure that the ESD wrist strap is grounded and in a close contact with your wrist.

Step 2 Record the location of each optical fiber on the old optical module and check whether the labels on the optical fibers are correct and clear. If any labels are unclear, replace them and ensure that the details are correct.

Step 3 Release the locking clip on the fiber connector, gently push the fiber connector inward, and then pull out the optical fiber. After removing the optical fibers from the optical module, cover the connectors with dust caps.

The locking clip varies on different fiber connectors.

- **Figure 5-2** shows the locking clips on an LC/PC connector. Hold down the locking clips when pulling the optical fibers.

- **Figure 5-3** shows the locking clip on an MPO connector. The locking clip is released automatically when you pull the MPO connector.
- **Figure 5-4** shows the locking clip on an SC/PC connector. The locking clip is released automatically when you pull the SC/PC connector.

Figure 5-2 LC/PC connector

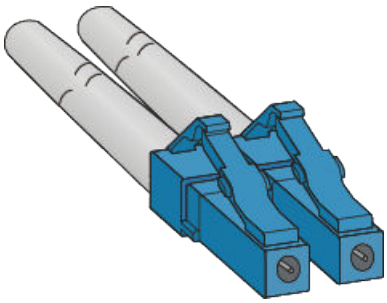

Figure 5-3 MPO connector

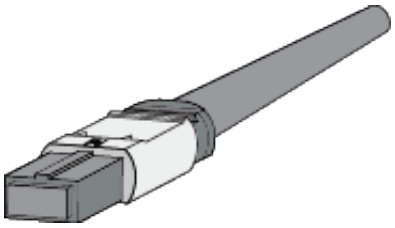

Figure 5-4 SC/PC connector

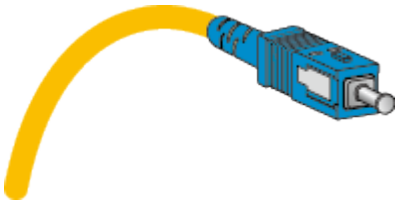

Step 4 Remove the optical module and cover the bores with dust plugs. Store optical module safely.

The latch varies on different optical modules. **Figure 5-5** shows an optical module with a clasp latch. To release the clasp latch, rotate it down. **Figure 5-6** shows an optical module with a tab latch. The tab latch is released when you pull it.

Figure 5-5 Optical module with a clasp latch

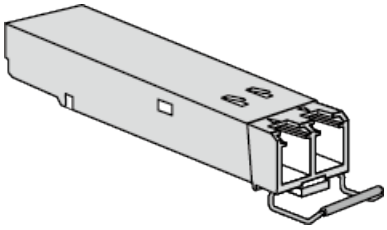

Figure 5-6 Optical module with a tab latch

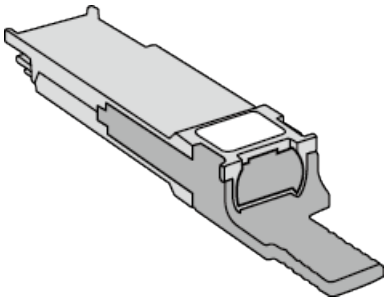

Step 5 Take out the new optical module from the package. Ensure that the optical module is correctly oriented and gently push it into the optical port until you hear a click.

NOTE

The new optical module must have the same optical parameters as the remote optical module connected to it.

Step 6 Identify the optical fibers to be connected to the optical module. Remove the dust caps from the optical fibers and insert the optical fibers to the bores of the optical module.

----End

Follow-up Procedure

If the new optical module does not work, unplug the optical fibers and clean their connectors in one direction with an alcohol swab. Then, re-connect them. If this fails to resolve the issue, contact the equipment supplier or local maintenance personnel for technical support.

6 Typical Troubleshooting Cases of Optical Module

6.1 General Optical Module Troubleshooting Procedure

6.2 A Switch Cannot Display Any Optical Module Information but Services Are Running Normally

6.3 Transmit Power of an Optical Module Is Low

6.4 An Optical Module Does Not Emit Optical Signals

6.5 An Optical Module Has Normal Transmit Power but Many Packets Are Dropped on the Port Due to Bit Errors

 Copyright © Huawei Technologies Co., Ltd.

6.1 General Optical Module Troubleshooting Procedure

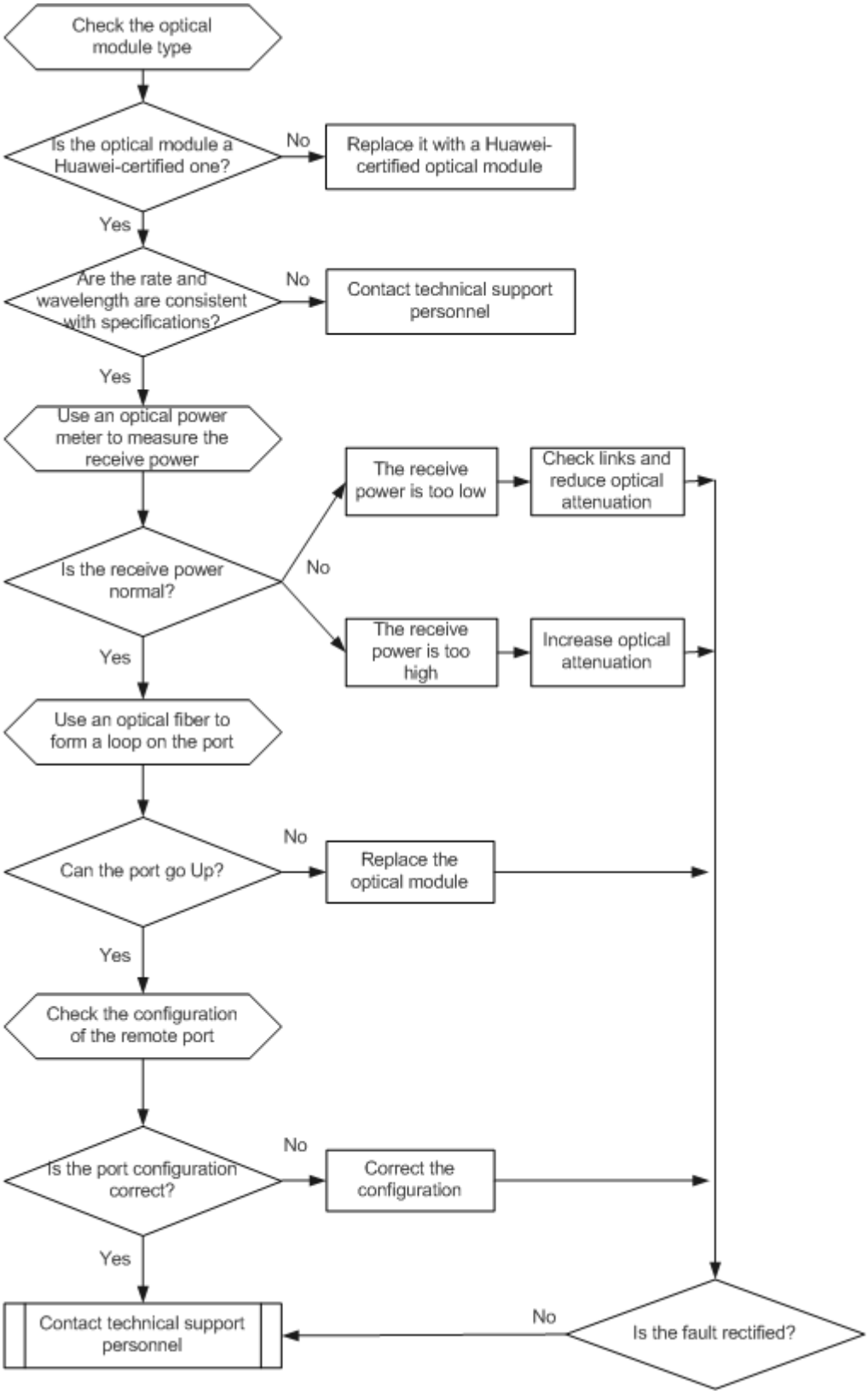

Step 1 Check whether an optical module is a bogus one. An optical module delivered by Huawei is uniquely identified by an SN. If two or more optical modules have the same SN, bogus optical modules are used.

Step 2 Check whether the optical module is a Huawei-certified one. If not, replace it with a Huawei-certified optical module.

Step 3 If the optical module is installed on a GE port, run the **display interface GigabitEthernet** *x/x/x* command to check information about the port, including the rate and wavelength. Check whether the information is consistent with the optical module specifications provided in the product documentation. (For details about the commands for querying port information, see the command reference of a specific switch model.)

Step 4 Use an optical power meter to measure the receive power of the port.

Step 5 Form a loop on the port using an optical fiber, and check whether the port can go Up (if optical modules with a long transmission distance are used, use optical attenuators.)

Step 6 Check the configuration, such as auto-negotiation, of the remote port.

Step 7 Take corresponding troubleshooting measures based on the fault causes. If the optical module is not a Huawei-certified one, replace it with a Huawei-certified optical module. If the optical module is faulty, replace it. If the fault is caused by incorrect configuration or networking environment, change the configuration or networking environment. If the fault persists, contact technical support personnel.

----End

6.2 A Switch Cannot Display Any Optical Module Information but Services Are Running Normally

Procedure

Step 1 Check whether the optical modules are Huawei-certified ones. If not, contact the supplier of the optical modules.

Step 2 If possible, remove and reinstall the optical modules to check whether the fault is rectified.

Step 3 If the fault persists, run the **reboot** command to restart the switch or power cycle the switch, and check whether the fault is rectified. If not, run the **display version** command to check the software version of the switch. You are advised to upgrade the switch to V100R006C01SPC100 or a later version.

Step 4 If the fault persists, contact technical support personnel.

NOTICE

On the live network, services on a switch will be affected if you remove and reinstall optical modules, restart the switch, or upgrade the system software. Exercise caution when deciding to perform these operations.

----End

6.3 Transmit Power of an Optical Module Is Low

Use an optical power meter to measure the transmit power of the optical module. If the transmit power is much lower than the transmit power specification of the optical module, possible causes are as follows:

1. Optical bores of the optical module are contaminated. Use a cotton swab to clean the optical bores. Cover idle optical modules with dust plugs.
2. The laser transmission circuit of the optical module is faulty. If the fault persists, the optical module may be faulty. Contact technical support personnel.

6.4 An Optical Module Does Not Emit Optical Signals

Step 1 Use an optical power meter to measure the transmit power of the optical module.

Step 2 If the transmit power of the optical module is not in the normal range, replace the optical module.

----End

6.5 An Optical Module Has Normal Transmit Power but Many Packets Are Dropped on the Port Due to Bit Errors

Step 1 Use an optical power meter to check whether the receive power of the optical module is in the normal range. The receive power must be measured at the receive end of the optical fiber.

Step 2 If the receive power is too low, check whether the optical fiber is faulty. Possible causes include: The connector attenuation of the optical fiber exceeds the attenuation threshold, or the optical fiber is bent seriously.

Step 3 Install another optical module on the port and check whether the fault persists. If not, the original optical module is faulty. Troubleshoot the optical module fault by referring to **6.1 General Optical Module Troubleshooting Procedure**.

----End